GB130

Service Manual

LG Electronics

Table Of Contents

1. INTRODUCTION……..…..3

1.1 Purpose……..……3

1.2 Regulatory Information……..……3

2. PERFORMANCE……..….5

2.1 H/W Features……..……5

2.2 S/W Features…….….6

3. TECHNICAL BRIEF……..….12

3.1 Digital Main Processor(PMB7890)…..……..12

3.2 Memory chip (S71GL064NA0BFW0Z0)…..……19

3.3 Power Amplifier Module (SKY77518) ……20

3.4 RF SAW (B9308)…….……21

3.5 Audio Amplifier (TPA6202A1)……..….22

3.6 Charger IC (MP26021)……...….23

3.7 FM Radio (Si4708)……..…....25

3.8 LCD Interface……..27

3.9 SIM Card Interface……..…….…...30

3.10 KEYPAD Interface…….…..….31

3.11 Key LED Interface…….…..…….32

3.12 Vibrator Interface…….……33

4. TROUBLE SHOOTING…….……34

4.1 Power On Trouble……...34

4.2 SIM Card Trouble……..….37

4.3 Vibrator Trouble…….….39

4.4 Keypad Trouble……...41

4.5 RTC Trouble……45

4.6 Key Backlight Trouble……47

4.7 LCM Backlight Trouble…….…….51

4.8 LCM Trouble……...53

4.9 Microphone Trouble……55

4.10 Receiver Trouble……....57

4.11 Speaker Trouble…….60

4.12 Headphone Trouble……63

4.13 Charging Trouble……....67

4.14 FM Radio Trouble……..69

4.15 RF Trouble……..73

5. DOWNLOAD……90

5.1 Download setup……....90

5.2 Download Process……91

6. BLOCK DIAGRAM……...102

7. CIRCUIT DIAGRMA……103

8. BGA IN PIN Check…….112

9. PCB LAYOUT…….114

10.ENGINEERING MODE……116

11.CALIBRATION……..118

11.1 Test equipment setup…….…..….118

11.2 APT Technologies……..…...118

12. Stand alone test……..…133

12.1 Test Program Setting……....133

12.2 TX Test ……..…..135

12.3 RX Test……....136

13. EXPLODED VIEW& REPLACEMENT PART LIST…..…137

13.1 Exploded View…….….137

13.2 Replacement Part……..…139

1. INTRODUCTION

1.1 Purpose

This manual provides information necessary to repair, description and download the features of this model.

1.2 Regulatory Information

A. Security

Toll fraud, the unauthorized use of telecommunications system by an unauthorized part(for example , persons other than your company's employees, agents, subcontractors, or person working on your company's behalf) can result in substantial additional charges for your telecommunications services. system users are responsible for the security of own system. There are may be risks of toll fraud associated with your telecommunications system. System users are responsible for programming and configuring the equipment to prevent unauthorized use .The manufacturer dose not warrant that this product is immune from the above case but will prevent unauthorized use of common-carrier telecommunications service of facilities accessed through or connected to it.
The manufacturer will not be responsible for any charges that result from such unauthorized use.

B. Incidence of Harm

If a telephone company determines that the equipment provided to customer is faulty and possibly causing harm or interruption in service to the telephone network, it should disconnect telephone service until repair can be done. A telephone company may temporarily disconnect service as long as repair is not done.

C. Changes in Service

A local telephone company may make changes in its communications facilities or procedure. If these changes could reasonably be expected to affect the use of the this phone or compatibility with the network, the telephone company is required to give advanced written notice to the user, allowing the user to take appropriate steps to maintain telephone service.

D. Maintenance Limitations

Maintenance limitations on this model must be performed only by the manufacturer or its authorized agent . The user may not make any changes and/or repairs expect as specifically noted in this manual. Therefore, note that authorized alternations or repair may affect the regulatory status of the system and may void any remaining warranty.

E. Notice of Radiated Emissions

This model complies with rules regarding radiation and radio frequency emission as defined by local regulatory agencies. In accordance with these agencies, you may be required to provide information such as the following to the end user.

F. Pictures

The pictures in this manual are for illustrative purposes only; your actual hardware may look slightly different.

G. Interference and Attenuation

Phone may interfere with sensitive laboratory equipment, medical equipment, etc. Interference from unsuppressed engines or electric motors may cause problems.

H. Electrostatic Sensitive Devices

ATTENTION

Boards, which contain Electrostatic Sensitive Devices(ESD),are indicated **by the sign .**

Following information is ESD handing:

. Service personnel should ground themselves by using a wrist strap when exchange system boards.

. When repairs are made to a system board , they should spread the floor with anti-static mat which is also grounded .

. Use a suitable, grounded soldering iron .

. Keep sensitive parts in these protective packages until these are used.

. When returning system boards or parts like EEPROM to the factory, use the protective packages as described.

2. PERFORMANCE

2.1 H/W Features

Solution	**EGOLD Voice v2 (ULC2+)**	**Infineon**
Type	Slide type	
Antenna Type	Internal (dual-Band)	
Main Display	2.0" 128x160 TFT/65k	
Frequency	*900 MHz/class 4 (2W)* *1800 MHz/class 1 (1W)*	Dual Band (900/1800) Dual Band (900/1800)
Physical	The physical dimension is [Length x Width x Thickness mm] The overall volume is [# cc] The weight is [# g]	Target:103x47x15.5mm TBD TBD
Vibrator	Shall support in built vibration alert	
Battery	950mAh Li-ion inner pack	950mAh: 55x34x50mm
FM Receiver	Yes(Option)	(87.5~108MHz)
Loud Speaker	Yes	
Memory Size	TBD	Will be fixed at Pre kick off
Standby Time	Shall support minimum test hours as [hrs] based on battery capacity of [mAh] (Reference measurement conditions refer to TW-09)	↑ 440 hrs & ↓ 2.1mA @ 950mAh (P.P.:5)
Talk Time	Shall support minimum test minutes as [min] based on battery capacity of [mAh] (Reference measurement conditions refer to TW-09)	↑6hrs30min@950mAh (PCL: 10) (Talk time = 95% Capacity / Talk current)
RTC	The real time clock shall be able to sustain for at least [#hrs] after removing the battery.	TBD
LMT (Lost Mobile Tracker)	TBD	LMT for: AMA M-DOG: China

2.2 S/W Features

Feature	Detail Item	Description	
OS	OSE	Operating System	Y
Audio	Speech Code	FR,EFR,HR,AMR-NB	Y
	AMR code	GSM Full Rate 3GPP Adaptive Multi Rate (AMR-NB)	Y
	FM Radio		Y
	MP3 Ring Tone	MP3 decode	Y
	Integrated hands free speaker	Speaker phone mode	Y
	Key Tone Volume	6 Level (Include Mute)	Y
	Ring Tone Volume	6 Level (Include Mute)	Y
	Ring Tone	MP3 ring tone/10 Midi	Y
	Call Alert type	Ring, Vibrate, Ring & Vibrate, Ring after vibrate, Silent	Y
	Earpiece Volume	6 Level (Include Mute)	Y
	Mute		Y
Frequency Bands	GSM dual band MS 900-1800	Configuration is during software compile time.	Y
	PCS dual band MS 850-1900	N/A	N
Connectivity	Infrared (IrDA)		N
	Bluetooth		N
	USB		N
	USB Mass storage		N
	RS232(UART)	Only for Phone tool & download & PC Sync	Y
Display	RSSI	6 level (0~5 level)	Y
	Battery level	4 level (0~3 level)	Y
	RTC	Date & Time Display	Y
	PLMN/Service Indicator		Y

	Quick Access Mode In Idle	Profile/ SMS + Voice Mail	Y
	Dimming Clock		N
	Dual Clock		N
	Home shortcut	Display Shortcut icon in Idle	Y
Call History	Last Dial Number	Max : 20 records	Y
	Last Received Number	Max : 20 records	Y
	Last Missed Number	Max : 20 records	Y
	Scratch Pad Memory		N
	Call Duration	Last Call time, Total Call Time	Y
Call Management	Call Waiting		Y
	Call Swap		Y
	Call Retrieve		Y
	Auto Answer	Not supported in Headset Mode	Y
	Auto Redial		Y
	Calling Line		Y
	Full Call Divert		Y
	Speed Dialing		Y
	Last Number Redial		Y
	Multi Party Call		Y
	ECT	Explicit Call Transfer (4 + Send)	N
Network	Automatic Network Selection		Y
	Manual Network		Y
	Preferred Network		Y
	Network Service Status		Y
DTMF	DTMF Signaling		Y
	DTMF Enable & Disable		Y

Cell Broadcast	Read Cell Broadcast		Y
	On/Off setting	Receive On/Off	Y
	Alert setting		Y
	Language setting		Y
	Topics Setting		Y
Contacts(Phone Book)	Entry	500	Y
	Field	Name, Mobile, Home, Office	Y
	Copy	ME <-> SIM	Y
	Move	ME <-> SIM	Y
	FDN		Y
	SDN		Y
	Email Entry		N
	Picture ID		N
	Video Caller ID		N
	vCard		N
	Business Card		TBD
	Delete	Delete, Delete All(SIM or Phone), Multi Delete	Y
Supplementary Services	CFU	Call Forwarding Unconditional	Y
	CFB	Call Forwarding on Mobile Subscriber Busy	Y
	CFNRy	Call Forwarding on No Reply	Y
	CFNRc	Call Forwarding on Mobile Subscriber Not Reachable	Y
	BAOC	Barring of All Outgoing Calls	Y
	BOIC	Barring of Outgoing International Calls	Y
	BOICexHC	Barring of Outgoing International Calls except those directed to the Home PLMN Country	Y
	BAIC	Barring of All Incoming Calls	Y
	BICRoam	Barring of Incoming Calls when Roaming Outside the/Home PLMN Country	Y

	Conference Call	Up to 5	Y
SIM	Plug in Type	3V & 1.8 V	Y
	SIM Lock	Service Provider / Network Lock	Y
	SIM Toolkit	Class 3	Y
Short Message	Read Message		Y
	Write and Edit Message		Y
	Send and Receive Message		Y
	Reply to Message		Y
	Forward Message		Y
	Extract Number from Message		Y
	Message Status		Y
	Message Unread		Y
	Settable Message Center Number, Reply Path and Validity		Y
	Visible and Audible Message Receive		Y (No for Audible)
	Voice Mail		Y
	Settable Voice Mail Center Number		Y
	Message Protocol	Normal, Fax, National Paging, X400, ERMES, Voice	Y
	Message Overflow Indicator		Y
	Message Center Number		Y
	Nokia Smart Message		N

Miscellaneous Function	Development & Test Facility		Y
	Field Test Facility		Y
	Display Software Version		Y
	IMEI		Y
	Restore Factory Setting		Y
	Battery Charging Mode		Y
Text Input	Language	Selectable Auto Language	TBD
	Predictive word input	T9	Y
Scheduler	Calendar	MAX: 20 records (18 chars)	Y
	To Do		N
	Memo	MAX: 10 records (80 chars)	Y
World Time	Setting Local Time		Y
	Display Two Number of Cities Time	Dual Clock	N
	Daylight saving		N
	NITZ		Y
Unit converter		Length, Weight, Volume, Surface, Velocity, Temperature, User-defined	Y
Stop Watch			Y
Calculator		+ - * /	Y
PC Sync	Phone Book Sync	Only For service Center	TBD
	Message Sync		TBD
Game		1 game (SUDOKU? TBD)	Y
Security	Emergency Call		Y
	Handset Lock		Y
	Security Code	When Delete All	Y
	SIM Lock		Y

	Keypad Lock		Y
Real Time Clock	12/24 Hour		Y
	Calendar		Y
	Time Zone		Y
	Daylight saving		Y
	Alarm Manager		Y
	Dimming Clock		N
	Power-off Alarm		Y
	On Alarm Event		Y
Others	Mobile Tracking software	For India, Asia	TBD
	M-DOG	For China	TBD
Accessory	microSD Adapter		N
	Mono earmic (without hook switch)		Y

3. TECHNICAL BRIEF

3.1 Digital Main Processor

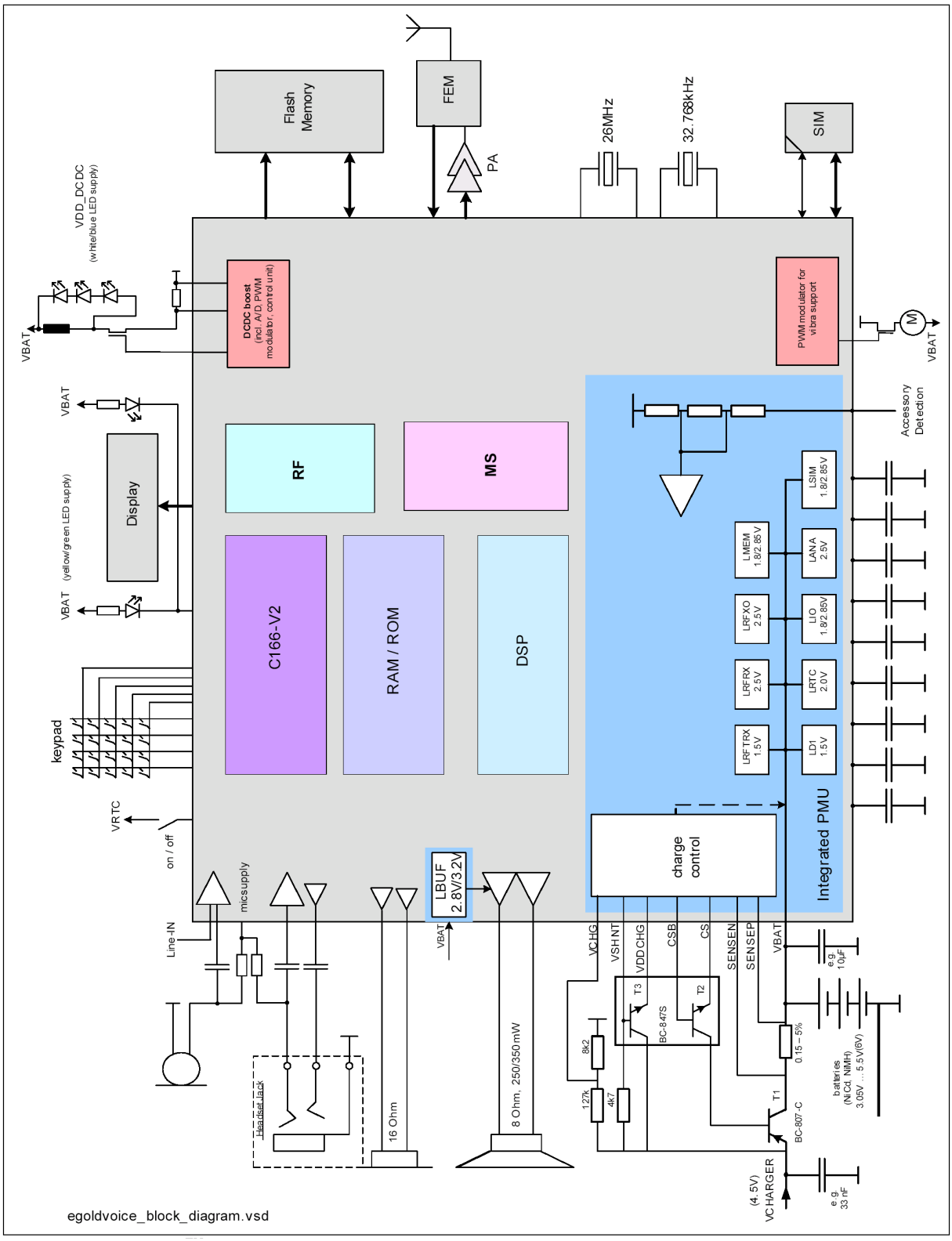

Figure.3-1 PMB7890 FUNCTIONAL BLOCK DIAGRAM

3.1.1 Overview of X-GOLDTM102

The X-GOLDTM102 is a GSM baseband modem including RF transceiver covering the low bands GSM850 / GSM900 and high bands GSM1800 / GSM1900 bands. X-GOLDTM102 is Dual Band, therefore, it supports by default a low / high pair of bands at the same time:

1. GSM850 / GSM1800
2. GSM850 / GSM1900
3. GSM900 / GSM1800
4. GSM900 / GSM1900.

The X-GOLDTM102 is optimized for voice-centric Mobile Phone applications.

The X-GOLDTM102 is designed as a single chip solution that integrates the digital, mixed-signal, RF functionality and a direct-to-battery Power Management Unit.

The transceiver consists of:

• Constant gain direct conversion receiver with an analog I/Q baseband interface
• Fully integrated Sigma/Delta-synthesizer capability
• Fully integrated two-band RF oscillator
• Two-band digital GMSK modulator with digital TX interface
• Digitally controlled crystal oscillator generating system clocks.

The X-GOLDTM102 supports a direct to battery connection, hence eliminating the need for an external Power Management Unit. The X-GOLDTM102 has different power down modes and an integrated power up sequencer.

The X-GOLDTM102 is powered by the C166®S-V2 MCU and TEAKLite® DSP cores. The operating temperature range from -30℃ to 85℃. It is manufactured using the 0.13 µm CMOS process.

3.1.2 Features

Baseband

• High performance fixed-point TEAKlite DSP
• C166S-V2 high performance microcontroller with a 16KB Instruction Cache and a Data cache Buffer.
• There are several Interfaces:
– I2S interface for DAI connections (for Tape Approval) and external Audio component connection.
– High Speed SSC Interface for connection of companion chips (like Serial SD Cards)
– High Speed SSC Interface dedicated to Display control
– USIM Interface with support of Protocol T=1
– Keypad Interface (6x4 or 5x5 keys)
– EBU for external RAM/NOR FLASH/Busrt Flash/NAND Flash/Parallel Display connection
– Asynchronous serial interface.
– Asynchronous serial interface for WLAN/BT/GPS control (incl. IrDA support capability) .
– JTAG Interface, OCDS, Multi-Core Debug and Real Time Trace facilities.
– Black & white and color displays are supported

– PWM source to drive vibrator
– Keypad and display backlight supported.
– HASH Unit support for hashing.

Receiver

• Constant gain, direct conversion receiver with fully integrated blocking filter
• Two integrated LNAs
• No need of interstage and IF filter
• Highly linear RF quadrature demodulator
• Programmable DC output level
• Very low power budget.
• GPRS (up to Class 10 type1)

Transmitter

• Digital Sigma-Delta modulator for GMSK modulation, typical -163.5 dBc/Hz @ 20 MHz
• Single ended outputs to PA, Pout = +3.5 dBm
• Very low power budget.

RF-Synthesizer

• ΣΔSynthesizer for multi-slot operation
• Fast lock-in times (< 150 µs)
• Integrated loop filter
• RF Oscillator
• Fully integrated RF VCO.

Crystal Oscillator

• Fully digital controlled crystal oscillator core with a highly linear tuning characteristic.

Mixed Signal and Power Management Unit

• DC/DC boost for voltages up to 15 V for driving White or Blue LEDs
• 8-Ohm loud speaker driver (250/350 mW)
• 16-Ohm earpiece driver
• 32-Ohm headset driver
• Measurement interfaces (PA temperature, battery voltage, battery temperature, and ambient temperature)
• Accessory Detection
• PCB ID detection
• Differential microphone input
• System start up circuitry
• Charger circuitry for NiCd, NiMh and LiIon cells with integrated Control Current/Voltage Charging.
• Integrated regulators for direct connection to battery.

Package

X-GOLDTM102 utilizes an PG-VF2BGA-189-1 lead-free (green) package. The high degree of integration in X-GOLDTM102 in conjunction with a sophisticated designed ball-out allows building a complete mobile phone with all its peripherals on a 4-layer PCB.

3.1.3 System Platform Application

X-GOLDTM102 was developed for very low cost Dual Band GSM/GPRS system solutions.
Here are some potential System Platform configurations that can be built with X-GOLDTM102 Solution:

Platform usecases	Memory Configuration	WLAN Behind AD Pins	BT Behind AD Pins	Serial SD-CARD Behind AD Pins	Serial SD-Card Behind USIM (time-sharing)	GPS
Platform-1	MUX memories	x	x			x
Platform-2	MUX memories		x	x		x
Platform-3	DEMUX memories				x	x

egoldvoice2_application-table.vsd

3.1.4 GSM System Description

The X-GOLDTM102 is suited for mobile stations operating in the GSM850/900/1800/1900 bands.
In the receiver path the antenna input signal is converted to the baseband, filtered, and then amplified to target level by the RF transceiver chip set. Two A-to-D converters generate two 6.5 Mbit/s data streams. The decimation and narrowband channel filtering is done by a digital baseband filter in each path. The DSP performs:
1. The GMSK equalization of the received baseband signal (SAIC support available)
2. Viterbi channel decoding supported by an hardware accelerator.
The recovered digital speech data is fed into the speech decoder. The X-GOLDTM102 supports fullrate, halfrate, enhanced fullrate and adaptive multirate speech CODEC algorithms.
The generated voice signal passes through a digital voiceband filter. The resulting 4 Mbit/s data stream is D-to-A converted by a multi-bit-oversampling converter, postfiltered, and then amplified by a programmable gain stage.
The output buffer can drive a handset ear-piece or an external audio amplifier, an additional output driver for external loud speaker is implemented.
In the transmit direction the differential microphone signal is fed into a programmable gain amplifier. The prefiltered and A-to-D converted voice signal forms a 2 Mbit/s data stream. The oversampled voice signal passes a digital decimation filter.
The X-GOLDTM102 performs speech and channel encoding (including voice activity detection (VAD) and discontinuous transmission (DTX)) and digital GMSK modulation.
In the RF transceiver part, the baseband signal modulates the RF carrier at the desired frequency in the 850 MHz, 900 MHz, 1.8 GHz, and 1.9 GHz bands using an I/Q modulator. The X-GOLDTM102 supports dual band applications.
Finally, an RF power module amplifies the RF transmit signal at the required power level. Using software, the X-GOLDTM102 controls the gain of the power amplifier by predefined ramping curves (16 words, 11 bits).

For baseband operation, the X-GOLDTM102 supports:
• High Speed Circuit Switched Data (HSCSD) class 4
• Packet-oriented data (GPRS) class 4 with a coding scheme from 1 to 4. It provides fixed, dynamic, and extended dynamic modes.
If the X-GOLDTM102 is only used as a modem, then it supports:
• High Speed Circuit Switched Data (HSCSD) class 10
• Packet-oriented data (GPRS) class 10 with coding schemes from 1 to 4. It provides fixed, dynamic, and extended dynamic modes.
The X-GOLDTM102 can support Class B operation. The mobile phone can be attached to both GPRS and GSM services (one service at a time). During a GPRS connection Class B enables either:
• Making or receiving a voice call
• Sending or receiving an SMS.
During voice calls or SMS, GPRS services are suspended and then resumed automatically after the call or SMS session has ended.

3.1.5 Bus Concept

The X-GOLDTM102 has two cores (a microcontroller and a DSP), each with its own bus.
There is an Shared memory interconnection between the TEAKlite bus and the C166S-V2 X-Bus.

C166S-V2 Buses

The C166S-V2 is connected to four buses:
1. IMB (Internal Program) bus
2. DPMI (Data-Program) Bus
3. X-Bus
4. PD-Bus.

TEAKLite Bus

The TEAKlite is connected to the TEAKlite bus.

Bus Interconnections

The interconnection between the X-Bus and the TEAKlite Bus uses:
• Multicore Synchronization
• Shared Memory.

3.1.6 Clock Concept

The X-GOLDTM102 has a flexible clock control.

3.1.7 Interrupt Concept

The C166 MCU carries out the X-GOLDTM102 interrupt system.

3.1.8 Debug Concept

The X-GOLDTM102 includes a multi-core debug. The C166 and TEAKlite cores can be debugged in parallel with:
• A single JTAG port (that is, on a single host)
• Mutual breakpoint control.

C166 Debug Concept

The debugging of the C166 uses the OCDS and the Cerberus.

The X-GOLDTM102 also inlcudes a Real Time Trace module for software debugging.

TEAKLite Debug Concept

TEAKlite debugging uses the OCEM and the SEIB.

3.1.9 Power Management

The X-GOLDTM102 provides the power management unit (PMU) for the complete mobile phone application. The integrated PMU is directly connected to the battery and provides a set of linear voltage regulators (LDO's). These LDO's generate all required supply voltages and currents needed in a low feature mobile phone.

The charger unit controls the charging of NiCd, NiMh, LiPolymer and LiON batteries. Only a few external parts are required to support charging from a DC wall adaptor. In addition, the charger generates the power-on reset after battery insertion or charger connection. The supported battery voltage range is 3.1 to 5.1 V for NiCd/NiMH and 3.1 to 4.6 V for LiPolymer and LiON batteries. The upper voltage limit is programmable.The charger supports constant current precharging, full-charging (pulsed charging) and software controlled constant current charging. The charging functions are protected by hardware timer. Charger idle voltages up to 20 V can be handled. An integrated overvoltage protection protects batteries and system against overvoltage.

White/blue backlight generation is supported with a special driver for very a low external parts count. Power consumption during operation phases is minimized due to flexible clock switching

In the Standby Mode most parts of the device are switched off, only a small part is running at 32kHz and the

controller RAM is switched to a power saving mode. The TEAKLite ROM can be switched off during Standby via SW.

This Units (associated to the Measurement Unit) provides also support for a accessory detection .

3.1.10 On-Chip Security Concept

Secure boot is based on a public/private key approach. Flash images that are not signed with the private key during phone manufacture cannot be loaded. Verification of the Flash code is done with the public key. The public key as well as hash and verify algorithms are stored in the ROM, which ensures a hardware secured boot procedure.

The following security features are supported:

• Prevention of illegal Flash programming

• Flash programming makes use of the X-GOLDTM102 ID for personalization checks with IMEI and SIM-lock protection

The security features use the following mechanism:

• Boot ROM flow:

– Controls the boot transition to external flash

– Controls the flash update

• Flash tied to the individual chip via an ID using e-fuses, that is, each X-GOLDTM102 chip has its own fused ID.
• Harware support of SHA1 algorithm to reduce the booting time.
Further details on the X-GOLDTM102 security concept are not publicly documented.

GSM Cipher Unit

This unit on the TEAKlite bus calculates the GSM/EDGE encryption keystream and the GSM/EDGE decryption
keystream. It implements the following algorithms: A5/1, A5/2, and A5/3.

3.1.11 Asynchronous Operation Mode Concept

The X-GOLDTM102 can operate in either:
• The traditional synchronous mode with the 26 MHz system clock synchronized on the base station
• A special asynchronous mode (XO concept).
In the asynchronous mode the 26 MHz clock input is not synchronized with the base station; the residual frequency offset is compensated in the digital signal processing domain. This processing includes frequency and timing compensation of the baseband and voiceband signals.

3.2 Memory chip (S71GL064NA0BFW0Z0)

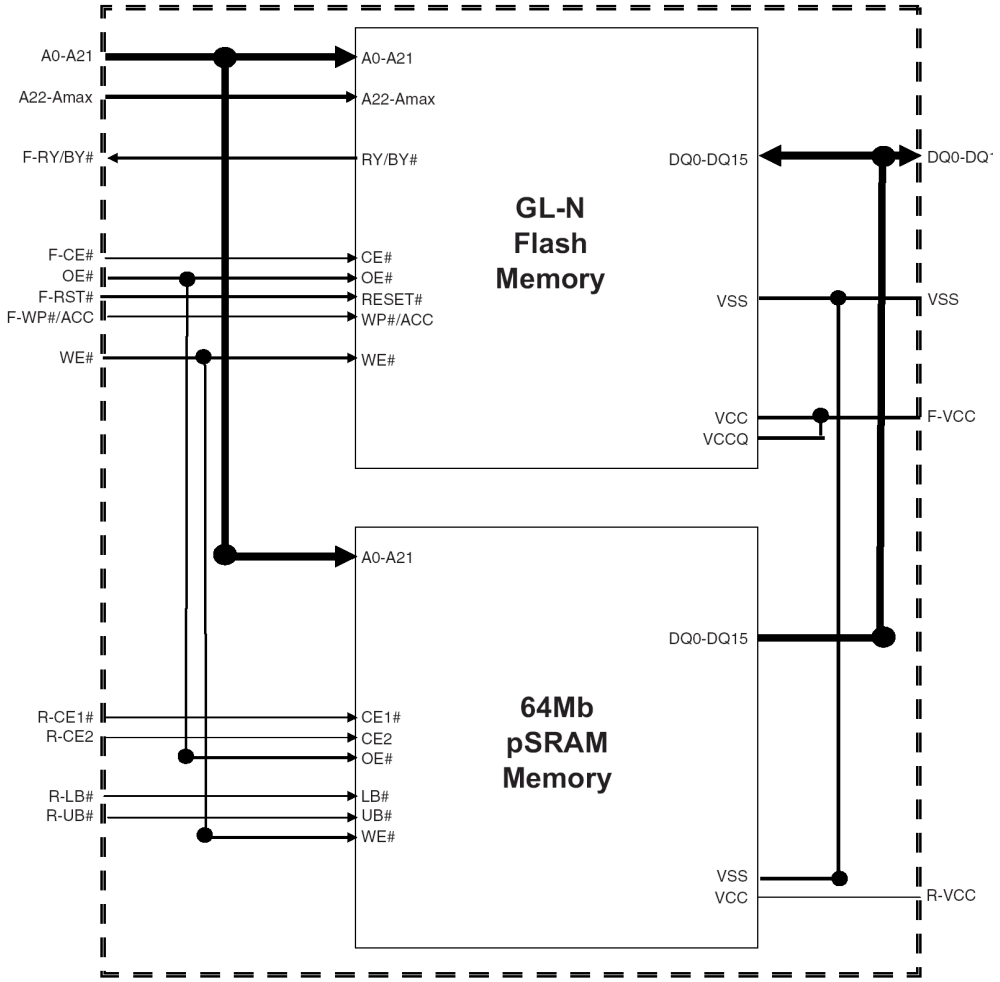

Figure.3-2 S71GL064NA0BFW020 FUNCTIONAL BLOCK DIAGRAM

Features

_ Power supply voltage of 2.7 to 3.1V

_ 100 ns access time (S71GL128N)

_ 105 ns access time (S71GL512N)

_ 25 ns page read times

_ Packages:

– *12.0 x 9.0 mm x 1.2 mm FBGA (TLD084) (S71GL512N)*

– *11.6 x 8.0 mm x 1.2 mm FBGA (TLA084) (S71GL128N)*

_ Operating Temperature

– *-25℃ to +85℃ (Wireless)*

General Description

The S71GL Series is a product line of stacked Multi-chip Product (MCP) packages and consists of

_ One Flash memory die

_ One pSRAM

3.3 Power Amplifier Module (SKY77518)

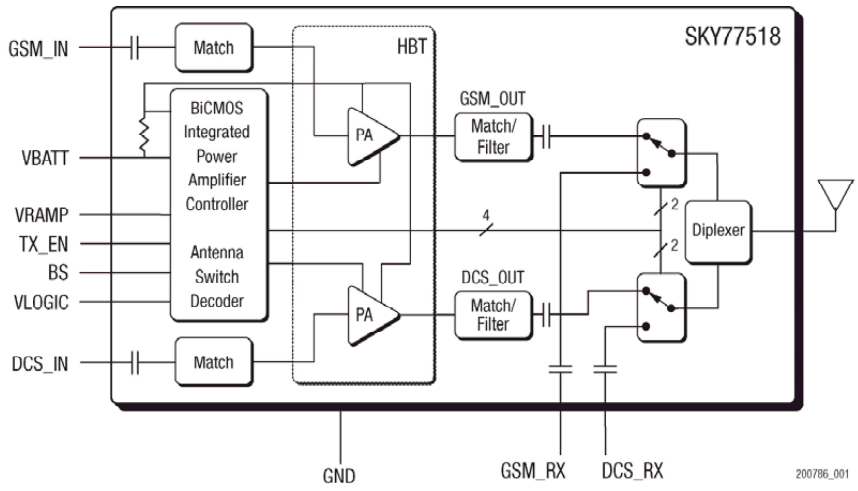

Figure.3-3 SKY77518 FUNCTIONAL BLOCK DIAGRAM

The SKY77518 is a transmit and receive front-end module (FEM) with Integrated Power Amplifier Control (iPAC™) for dual-band cellular handsets comprising GSM900 and DCS1800 operation. Designed in a low profile, compact form factor, the SKY77518 offers a complete Transmit VCO-to- Antenna and Antenna-to-Receive SAW filter solution. The FEM also supports Class 12 General Packet Radio Service (GPRS) multi-slot operation.

The module consists of a GSM900 PA block and a DCS1800 PA block, impedance-matching circuitry for 50 Ω input and output impedances, TX harmonics filtering, high linearity and low insertion loss PHEMT RF switches, diplexer and a Power Amplifier Control (PAC) block with internal current sense resistor. A custom BiCMOS integrated circuit provides the internal PAC function and decoder circuitry to control the RF switches. The two Heterojunction Bipolar Transistor (HBT) PA blocks are fabricated onto a single Gallium Arsenide (GaAs) die. One PA block supports the GSM900 band and the other PA block supports the DCS1800 band. Both PA blocks share common power supply pads to distribute current. The output of each PA block and the outputs to the two receive pads are connected to the antenna pad through PHEMT RF switches and a diplexer. The GaAs die, PHEMT die, Silicon (Si) die and passive components are mounted on a multi-layer laminate substrate. The assembly is encapsulated with plastic overmold.

Band selection and control of transmit and receive modes are performed using two external control pads. Refer to the functional block diagram in Figure.3-2-1 below. The band select pad (BS) selects between GSM and DCS modes of operation. The transmit enable (TX_EN) pad controls receive or transmit mode of the respective RF switch (TX = logic 1). Proper timing between transmit enable (TX_EN) and Analog Power Control (VRAMP) allows for high isolation between the antenna and TXVCO while the VCO is being tuned prior to the transmit burst.

The SKY77518 is compatible with logic levels from 1.2 V to VCC for BS and TX_EN pads, depending on the level applied to the VLOGIC pad. This feature provides additional flexibility for the designer in the selection of FEM interface control logic.

3.4 RF SAW (B9308)

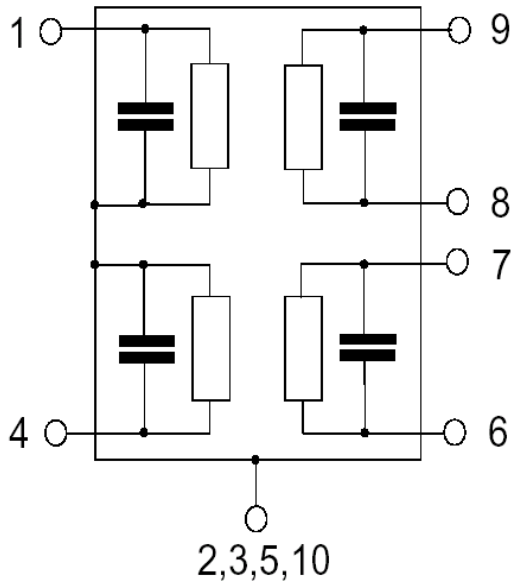

Application

Low-loss 2in1 RF filter for mobile telephone GSM 900 and GSM 1800 systems, receive path (Rx)

Usable passband:

Filter 1 (GSM 1800): 75 MHz

Filter 2 (GSM 900): 35 MHz

Unbalanced to balanced operation for both filters

Very low insertion attenuation

Low amplitute ripple

Impedance transformation from 50 W to 150 W for both filters

Suitable for GPRS class 1 to 12

Features

Package size 2.0 x1.6 x 0.68 mm3

Package code QCS10H

RoHS compatible

Approx. weight 0.008 g

Package for Surface Mount Technology (SMT)

Ni, gold-plated terminals

Electrostatic Sensitive Device (ESD)

Pin configuration

1 Input [Filter 1]

4 Input [Filter 2]

6,7 Output, balanced [Filter 2]

8,9 Output, balanced [Filter 1]

2,3,5,10 Case-ground

3.5 Audio Amplifier (TPA6202A1)

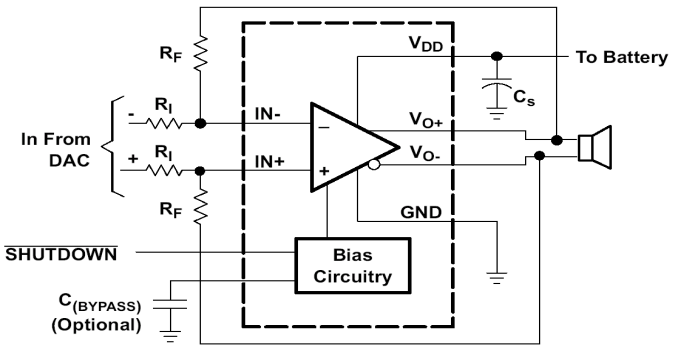

Figure.3-5 TPA6202A1 FUNCTIONAL BLOCK DIAGRAM

FEATURES

- 1.25 W Into 8W From a 5-V Supply at THD = 1% (Typical)
- Shutdown Pin has 1.8V Compatible Threshold
- Low Supply Current: 1.7mA Typical
- Shutdown Current < 10μA
- Only Five External Components
  - Improved PSRR (90 dB) and Wide Supply Voltage (2.5V to 5.5V) for Direct Battery Operation
- Avaliable in a 2 mm x 2 mm MicroStar Junior™ BGA Package (ZQV)

APPLICATIONS

- Designed for Wireless Handsets, PDAs, and other mobile devices
- Compatible with Low Power (1.8V Logic) I/O Threshold control signals

DESCRIPTION

The TPA6202A1 is a 1.25-W mono fully differential amplifier designed to drive a speaker with at least 8-Ω impedance while consuming less than 37 mm2 (ZQV package option) total printed-circuit board (PCB) area in most applications. This device operates from 2.5 V to 5.5 V, drawing only 1.7 mA of quiescent supply current. The TPA6202A1 is available in the space-saving 2 mm x 2 mm MicroStar Junior™ BGA package.

A fast start-up time of 4ms with minimal pop makes the TPA6202A1 ideal for wireless handsets.

3.6 Charger IC (MP26021)

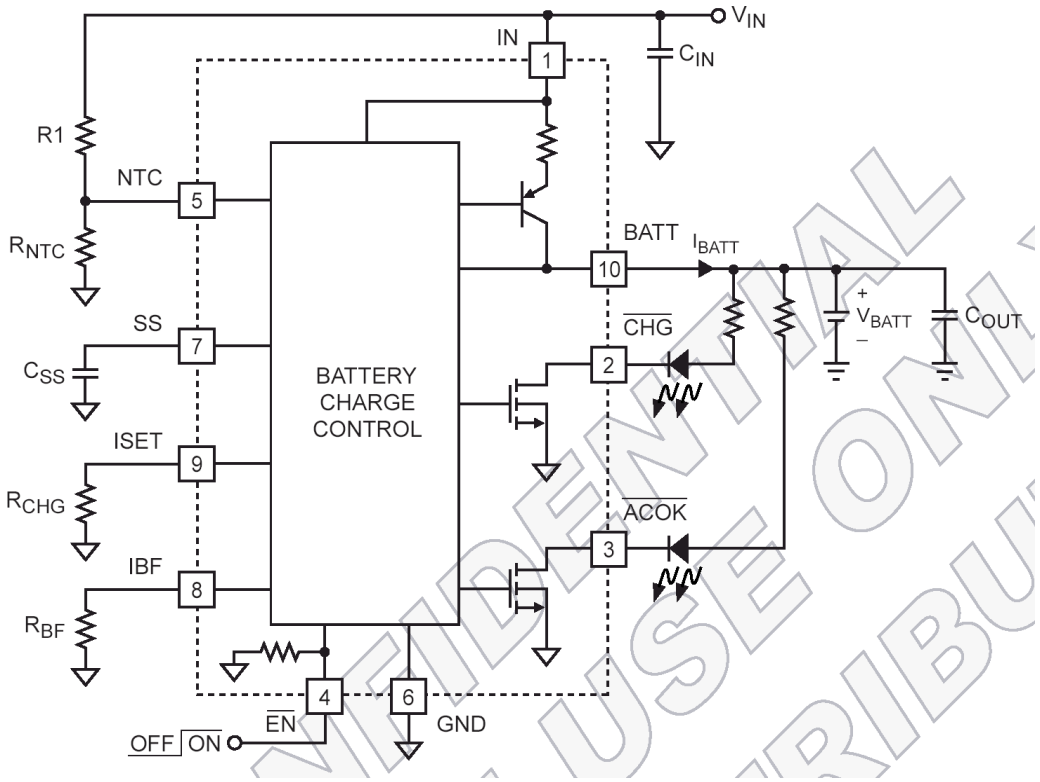

Figure.3-6 MP26021 FUNCTIONAL BLOCK DIAGRAM

DESCRIPTION

The MP26021 is a linear, high-performance single cell Li-Ion battery charger. By integrating high voltage input protection into the charger IC, the MP26021 can tolerate an input surge up to 28V.

The device features constant current (CC) and constant voltage (CV) charging modes with programmable charge currents (85mA to 1A), programmable battery full threshold, thermal protection, battery temperature monitoring, reverse current blocking and trickle charge. The device also provides AC adapter power good and charge status indications to the system.

MP26021 is available in a 10-pin 3mm x 3mm QFN package.

FEATURES

· Input Surge Up to 28V

· Adapter or USB Input

· Programmable Charge Current: 85mA to 1A

· Proprietary Constant Voltage Auto Recharge

· Proprietary Over-Voltage Protection

· 0.75% VBATT Accuracy

· <1μA Battery Reverse Current

· 90μA Standby Current from VIN

· Battery Temperature Monitoring
· Over Current Protection
· AC Adapter Power Good Indicator
· Charge Status Indicator
· Programmable Soft-Start
· Programmable Charge Termination Current Threshold
· Tiny 10-Pin QFN (3mm x 3mm) Package

APPLICATIONS

· Cell Phones
· MP3 Players
· Smart Phones
· PDAs
· Digital Cameras

3.7 FM Radio (Si4708)

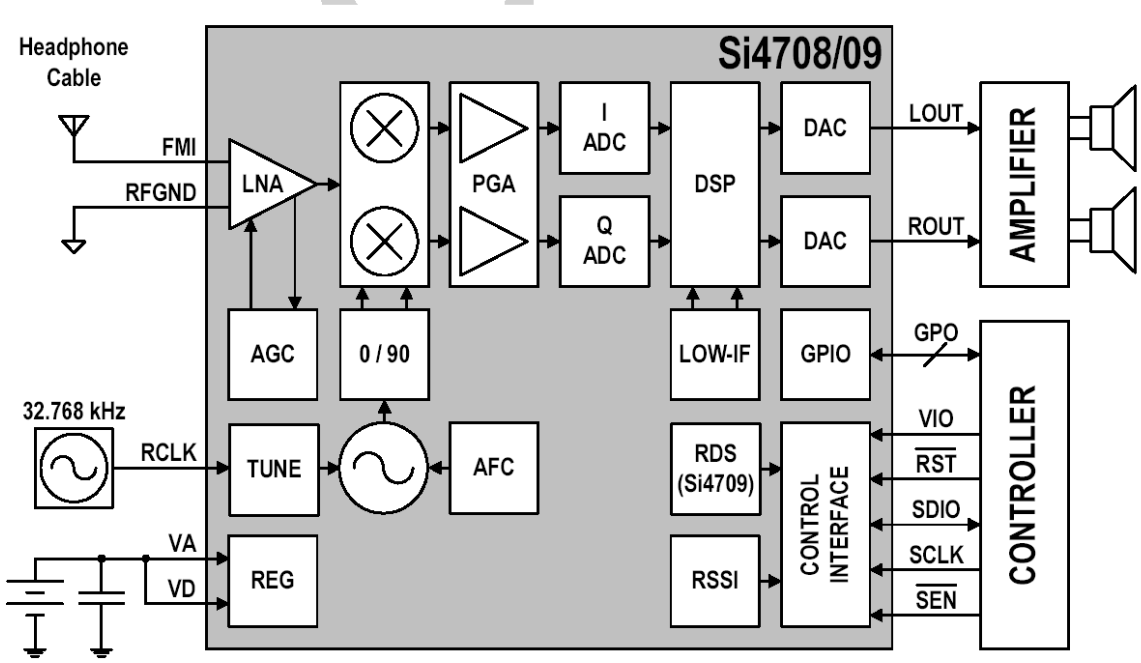

Figure.3-7 Si4708 FUNCTIONAL BLOCK DIAGRAM

The Si4708/09 extends Silicon Laboratories Si4700 FM tuner family, and further increases the ease and attractiveness of adding FM radio reception to mobile devices through small size and board area, minimum component count, flexible programmability, and superior, proven performance. Si4708/09 software is backwards compatible to existing Si4700/01/02/03 FM Tuner designs and leverages Silicon Laboratories' highly successful and patented Si4700/01/02/03 FM tuner. The Si4708/09 benefits from proven digital integration and 100% CMOS process technology, resulting in a completely integrated solution. It is the industry's smallest footprint FM tuner IC requiring only 6.25 mm2 board space and one external bypass capacitor.

The device offers significant programmability, catering to the subjective nature of FM listeners' audio preferences and variable FM broadcast environments worldwide.

The Si4709 incorporates a digital processor for the European Radio Data System (RDS) and the US Radio Broadcast Data System (RBDS) including all required symbol decoding, block synchronization, error detection, and error correction functions.

RDS/RDBS* enables data such as station identification and song name to be displayed to the user. The Si4709 offers a detailed RDS view and a standard view, allowing adopters to selectively choose granularity of software is backwards compatible to the proven Si4701/03, adopted by leading cell-phone and MP3 manufacturers world-wide.

The Si4708/09 is based on the superior, proven performance of Silicon Laboratories' Aero architecture offering unmatched interference rejection and leading sensitivity. The device uses the

same programming interface as the Si4700/01/02/03 and supports multiple bus modes. Power management is simplified with an integrated regulator allowing direct connection to a 2.7 to 5.5 V battery for VD and 2.7 to 5.5 V battery for VA.

The Si4708/09 device's high level of integration and complete FM system production testing increases quality to manufacturers, improves device yields, and simplifies device manufacturing and final testing.

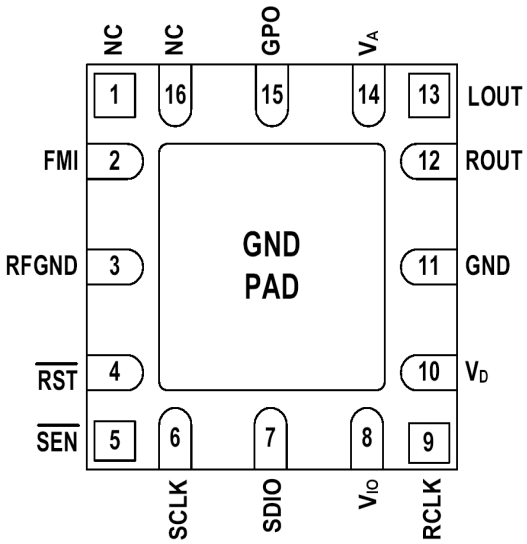

Top View

Pin Number(s)	Name	Description
1, 16	NC	No Connect. Leave floating.
2	FMI	FM RF inputs.
3	RFGND	RF ground. Connect to ground plane on PCB.
4	$\overline{\text{RST}}$	Device reset input (active low).
5	$\overline{\text{SEN}}$	Serial enable input (active low).
6	SCLK	Serial clock input.
7	SDIO	Serial data input/output.
8	V_{IO}	I/O supply voltage.
9	RCLK	External reference oscillator input.
10	V_D	Digital supply voltage. May be connected directly to battery.
11, PAD	GND	Ground. Connect to ground plane on PCB.
12	ROUT	Right audio output.
13	LOUT	Left audio output.
14	V_A	Analog supply voltage. May be connected directly to battery.
15	GPO	General purpose input/output.

Confidential

3.8 LCD Interface

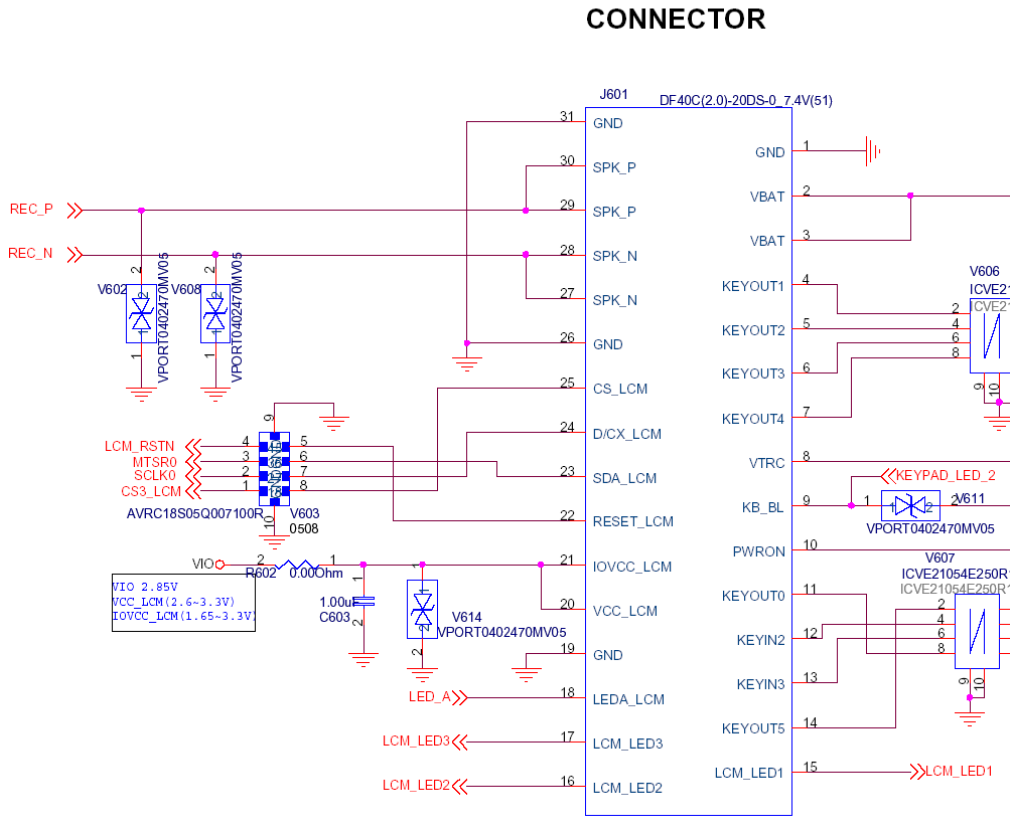

Figure.3-8-1 LCD Interface

The **IM200BBN2A** model is a Color TFT LCD supplied by LG Innotek.

This main Module has a 2.0 inch diagonally measured active display area with 128(RGB)X160 resolution. Each pixel is divided into Red, Green and Blue sub-pixels and dots which are arranged in vertical stripes.

Main LCD color is determined with 262,144 colors signal for each pixel.

The **IM200BBN2A** has been designed to apply the interface method that enables low power, high speed, and high contrast.

The **IM200BBN2A** is intended to support applications where thin thickness, wide viewing angle and low power are critical factors and graphic displays are important.

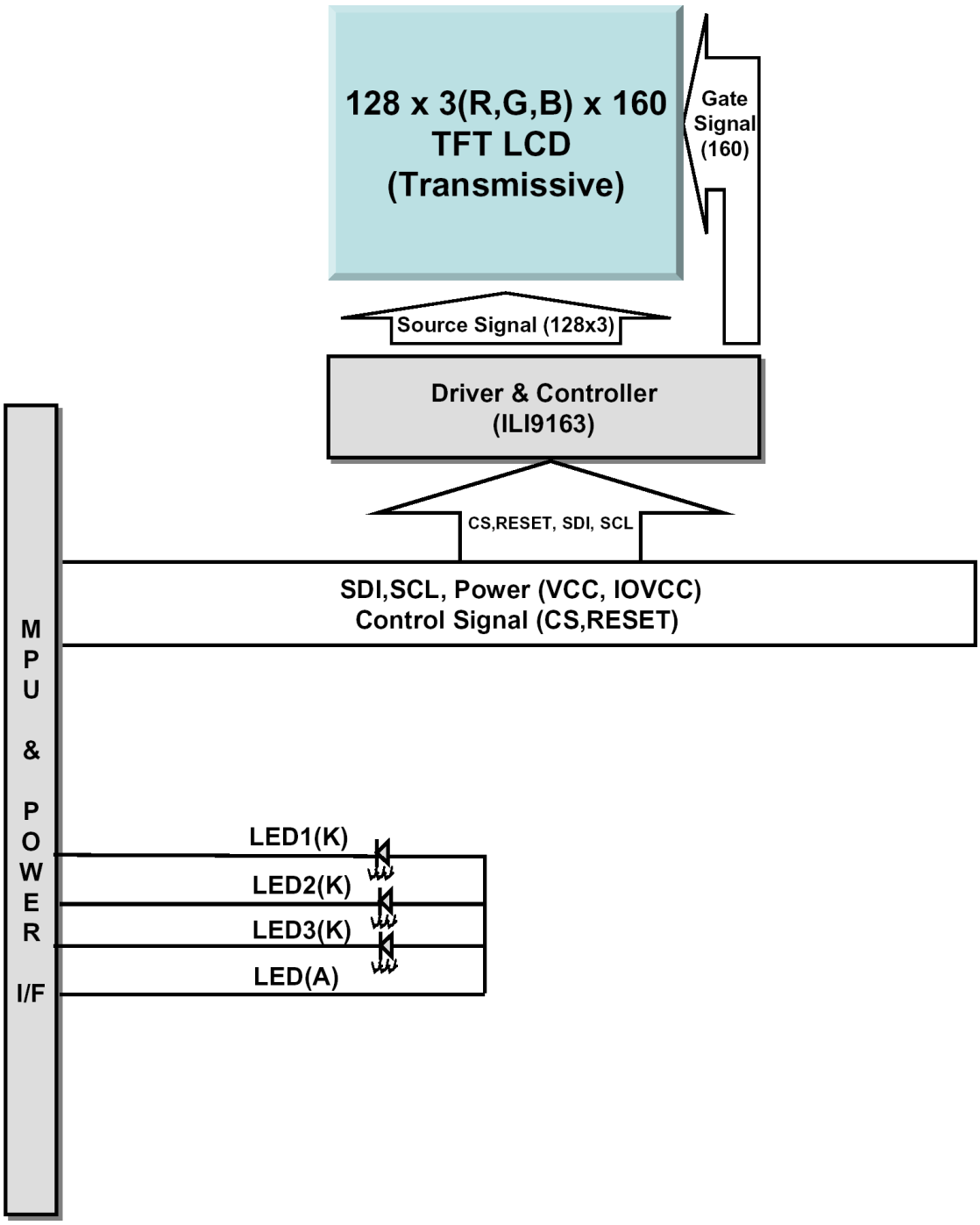
128 x 3(R,G,B) x 160
TFT LCD
(Transmissive)
Gate
Signal
(160)
Source Signal (128x3)
Driver & Controller
(ILI9163)
CS,RESET, SDI, SCL
SDI,SCL, Power (VCC, IOVCC)
Control Signal (CS,RESET)
MPU & POWER I/F
LED1(K)
LED2(K)
LED3(K)
LED(A)

Pin Description

Pin No.	Symbol	Description	Remark
1	NC	None connection	-
2	LED_Anode	LED Anode	-
3	LED_Cathod1	LED 1 Cahode	-
4	LED_Cathod2	LED 2 Cahode	-
5	LED_Cathod3	LED 3 Cahode	-
6	LED_Cathod4(NC)	None connection	-
7	GND	Ground	-
8	SCL (D/CX)	Serial clock	-
9	RESET	Reset signal	-
10	CS	Chip Selector singal	-
11	SDA(D0)	Serial Data	-
12	IM2(GND)	IF Mode (serial = Gnd)	-
13	Maker ID	High	-
14	IOVCC	Power Supply for LCD(1.65~3.3V)	-
15	VCCI	Power Supply for LCD(2.6~3.3V)	-
16	VCCI	Power Supply for LCD(2.6~3.3V)	-
17	GND	Ground	-

3.9 SIM Card Interface

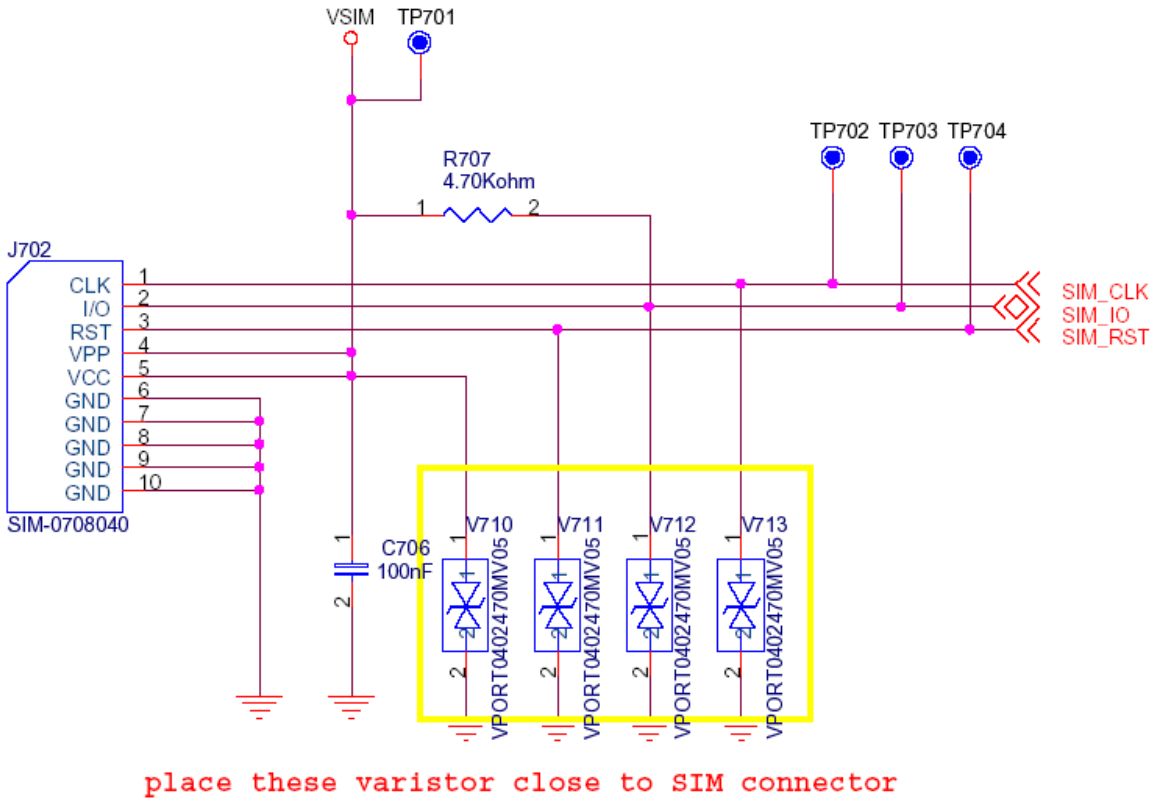

Figure.3-9 SIM CARD Interface

Signals	Description
SIM_RST	This signal makes SIM card to HW default status.
SIM_ CLK	This signal is transferred to SIM card .
SIM_I/O	This signal is interface datum.

3.10 KEYPAD Interface

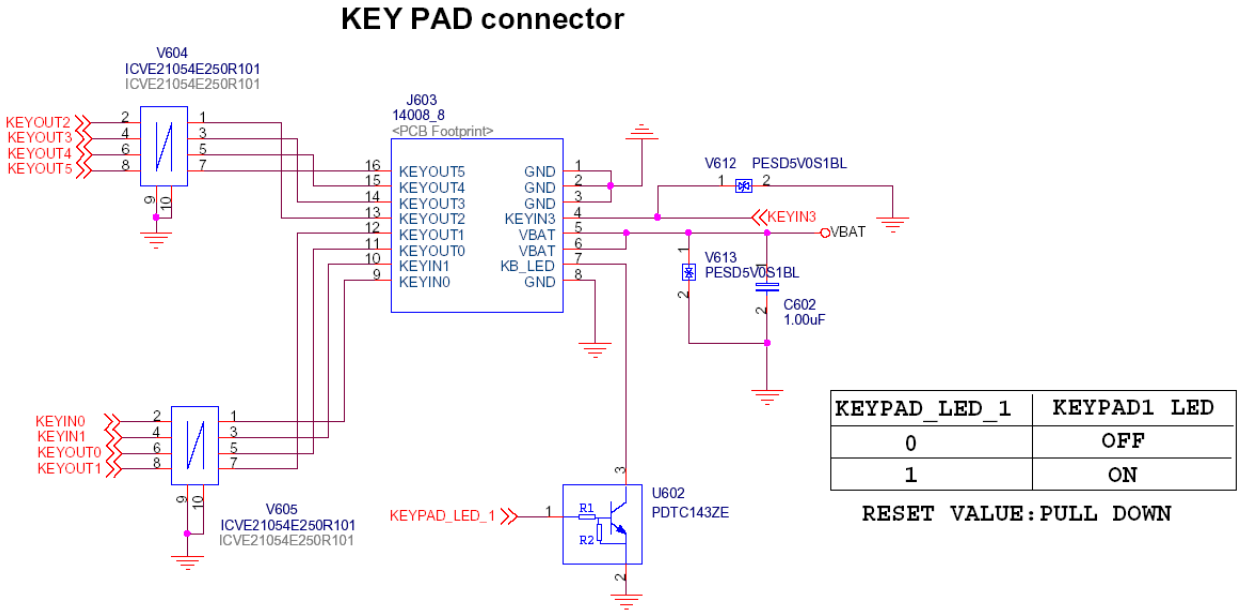

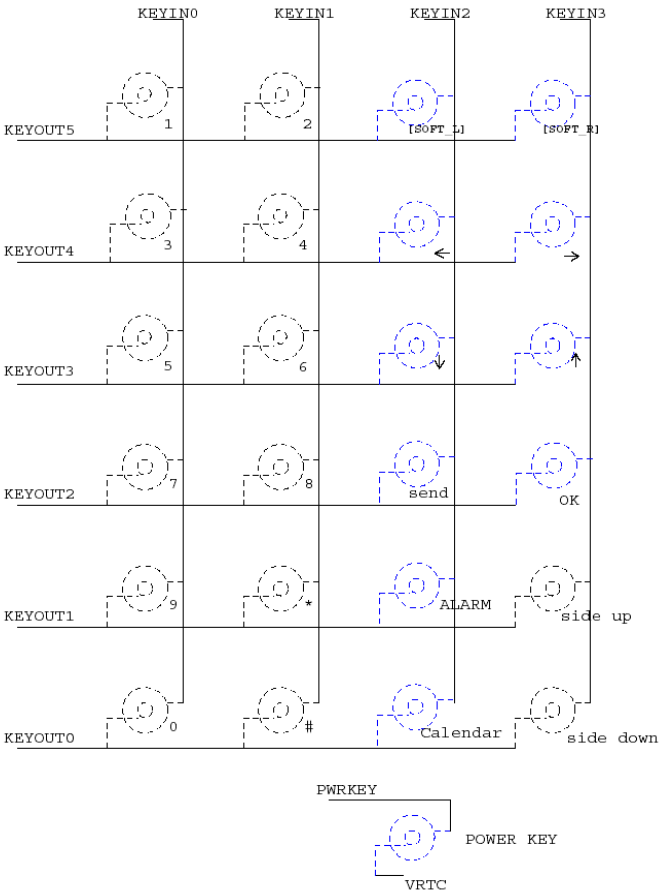

Figure.3-10 KEY PAD Interface

The keypad is a 4x6 scan matrix (4 input and 6 output pins).

3.11 Key LED Interface

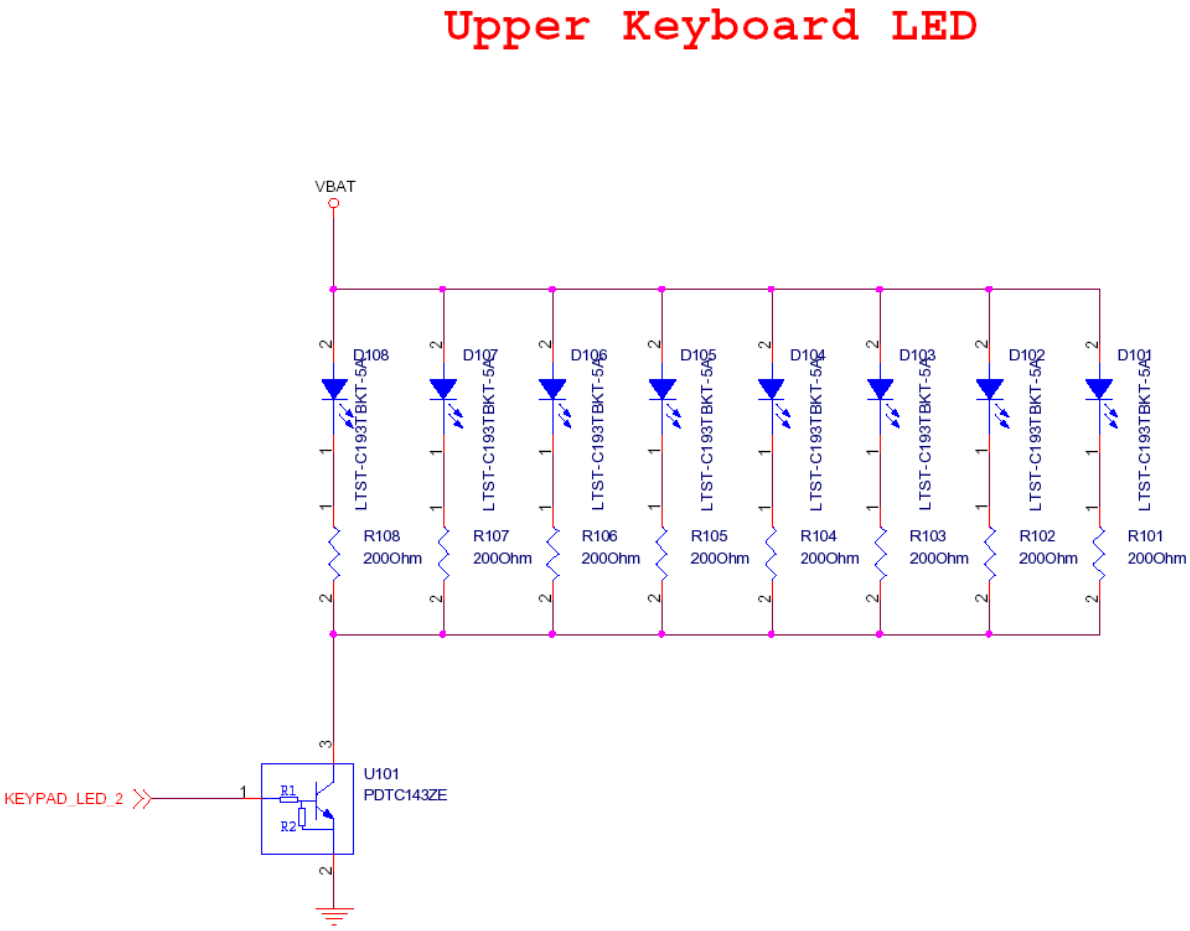

Figure.3-11 Key LED Interface

This handset has 8 LEDs that illuminates blue color.

Control signal is controlled byX-Gold102 with PWM and handset has 3 methods, ON, OFF, Dimming.

3.12 Vibrator Interface

VIB_ON	VIB state
0	OFF
1	ON

RESET VALUE:PULL DOWN

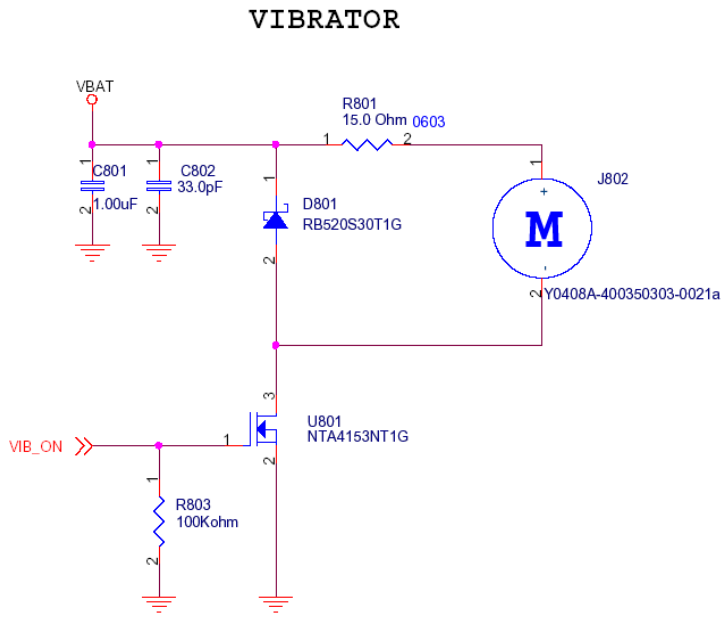

Figure.3-12Vibrator Interface

This handset has Vibrator operation. Control signal is controlled by X-Gold102.

4. Trouble shooting

GB130 BB Trouble shooting

4.1 Power On Trouble

Test Point

Check Points :

- Battery Voltage(Need to over 3.35V)
- Power-On key detection(PWRON signal)
- Outputs of LDOs U301 (EGV)

	Voltage	PART
VBUF	2.8V	TP1
VMEM	2.85V	TP2
VIO	2.85V	TP3
VSIM	2.85V	TP4
VRTC	1.5V	TP5
VANA	2.5V	TP6

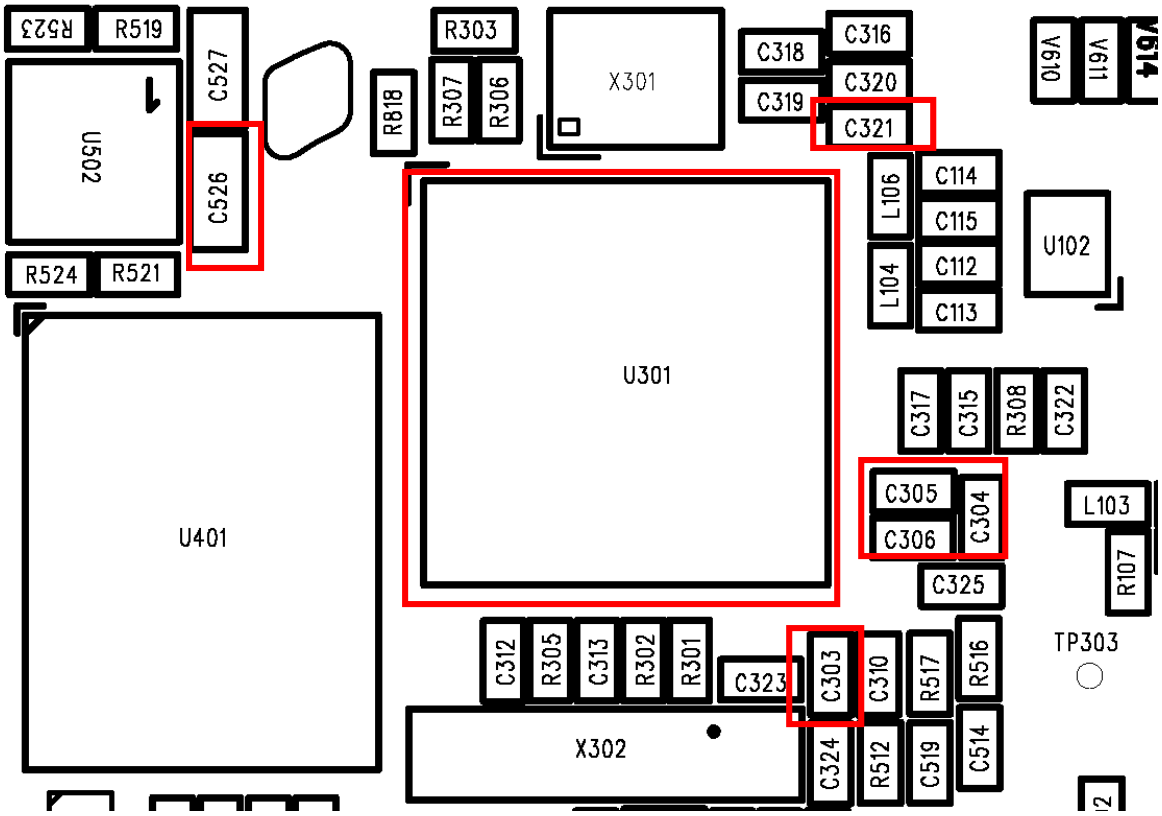

Circuit Diagram

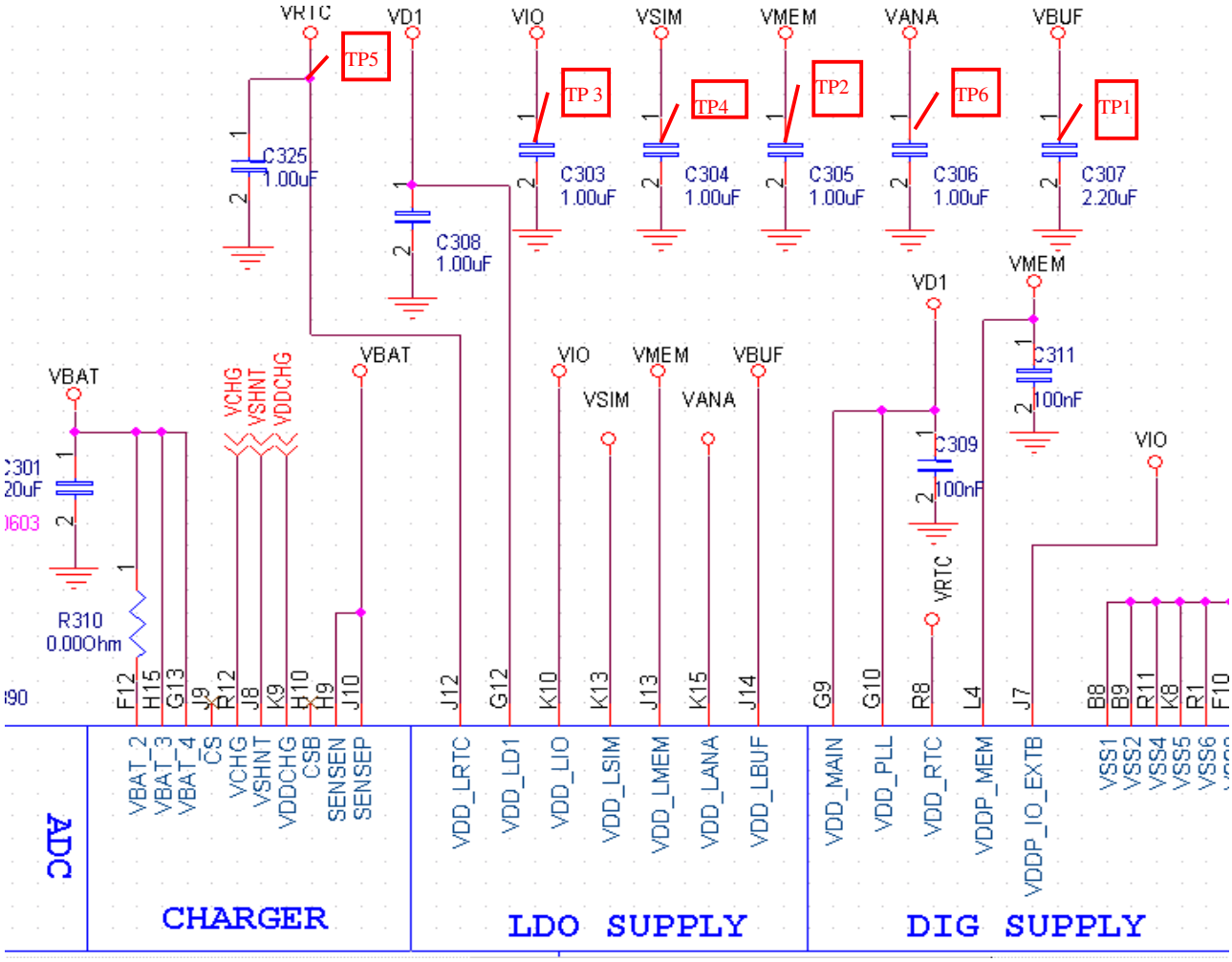

Checking Flow

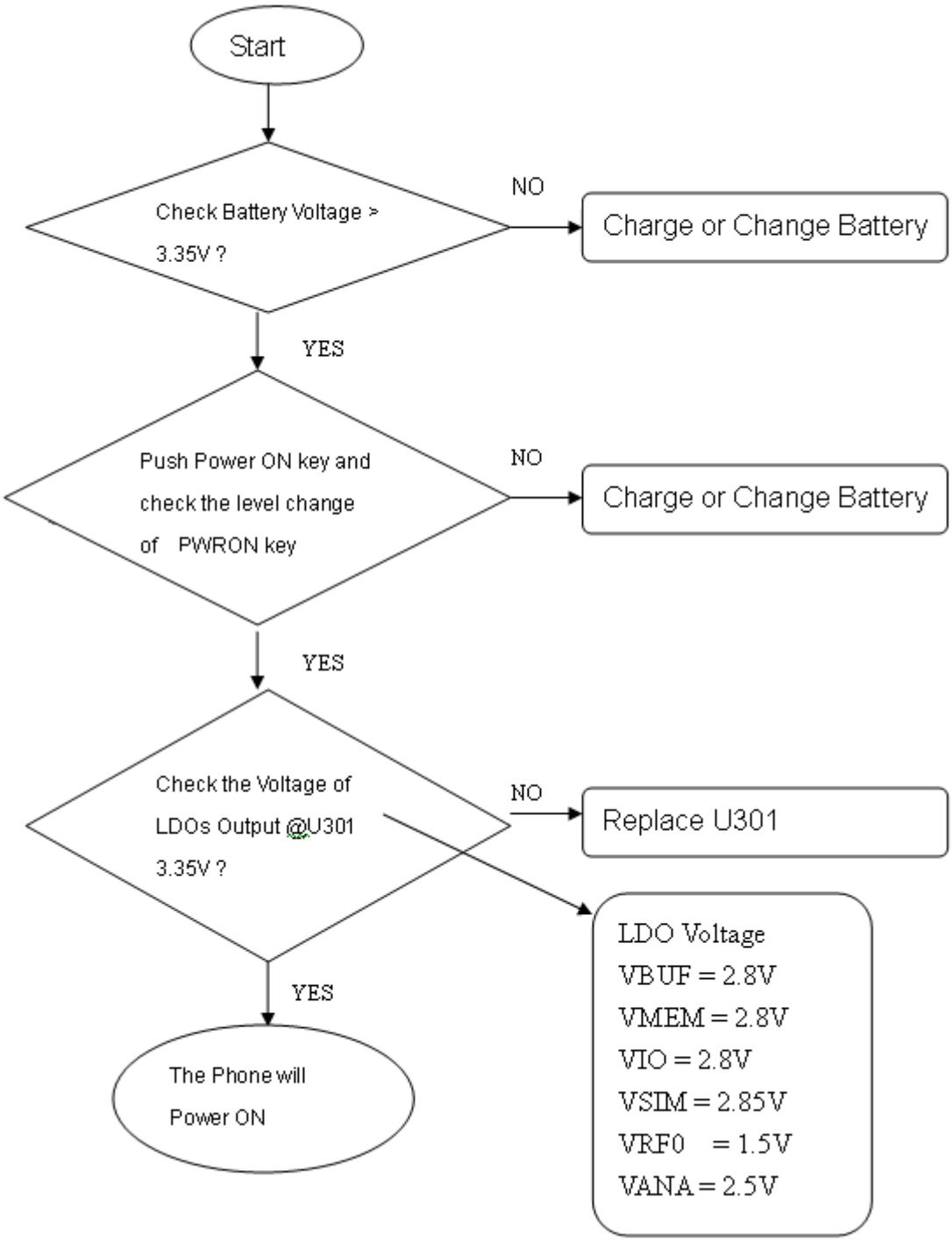

4.2 SIM Card Trouble

Test Point

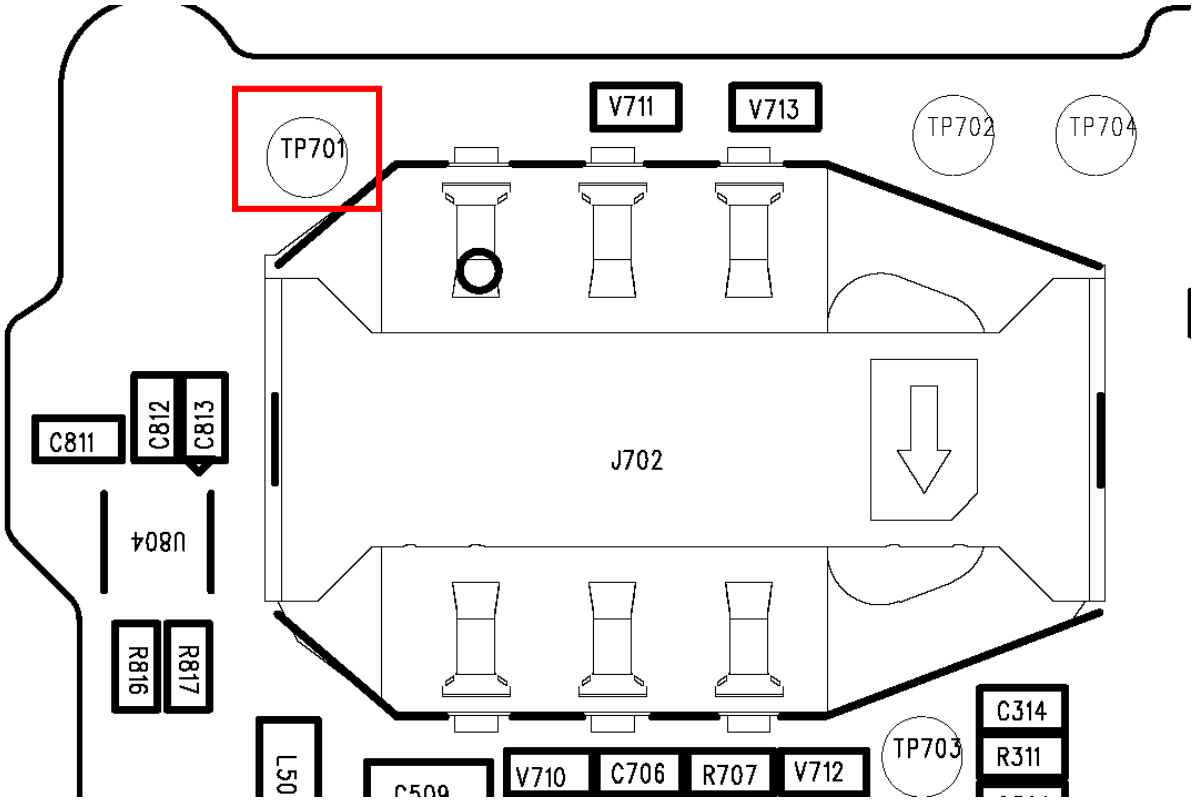

Circuit Diagram

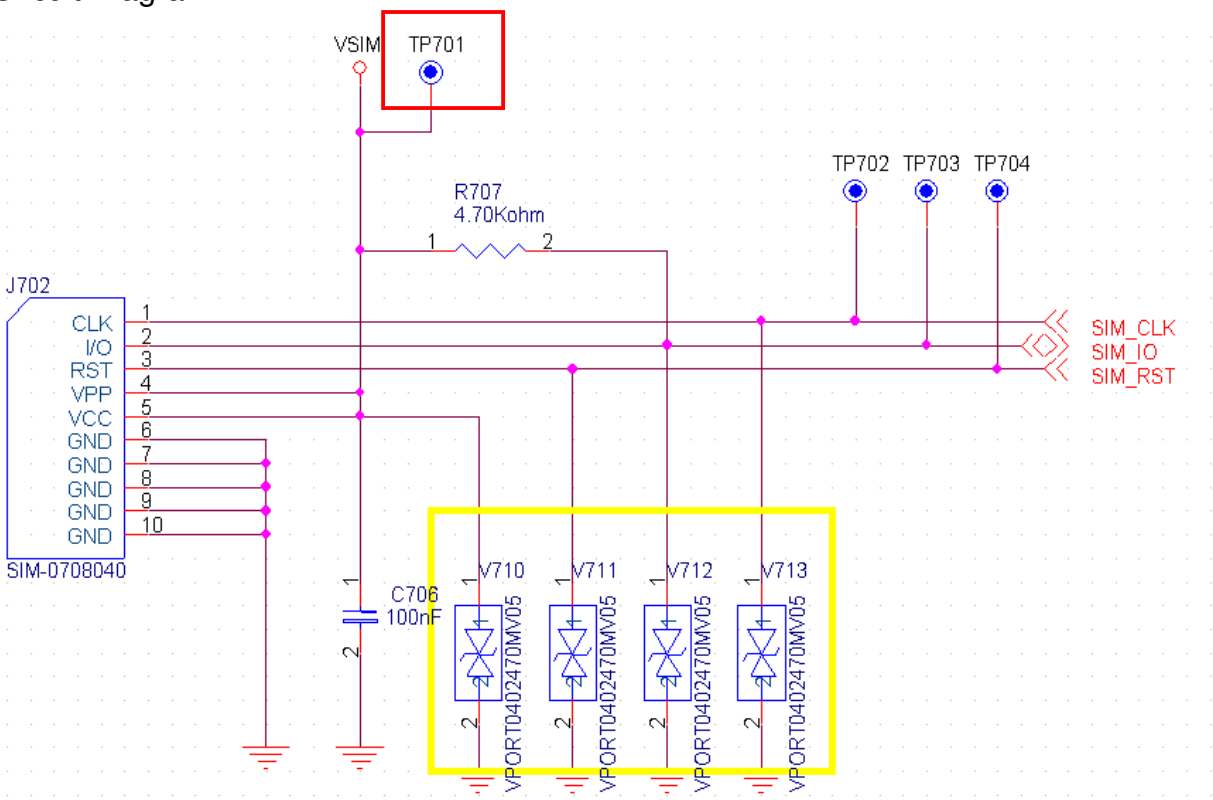

Checking Flow

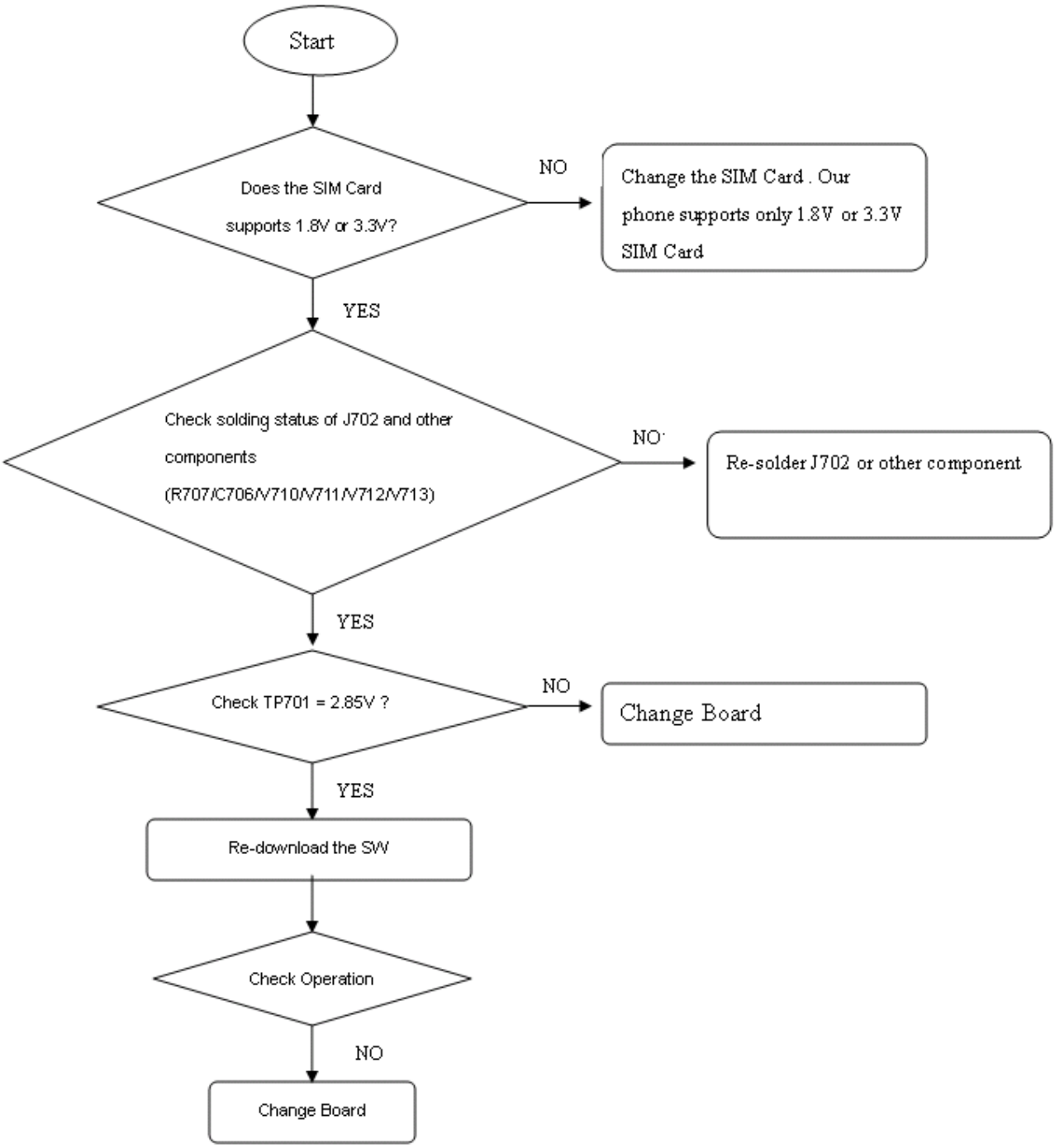

4.3 Vibrator Trouble

Test Point

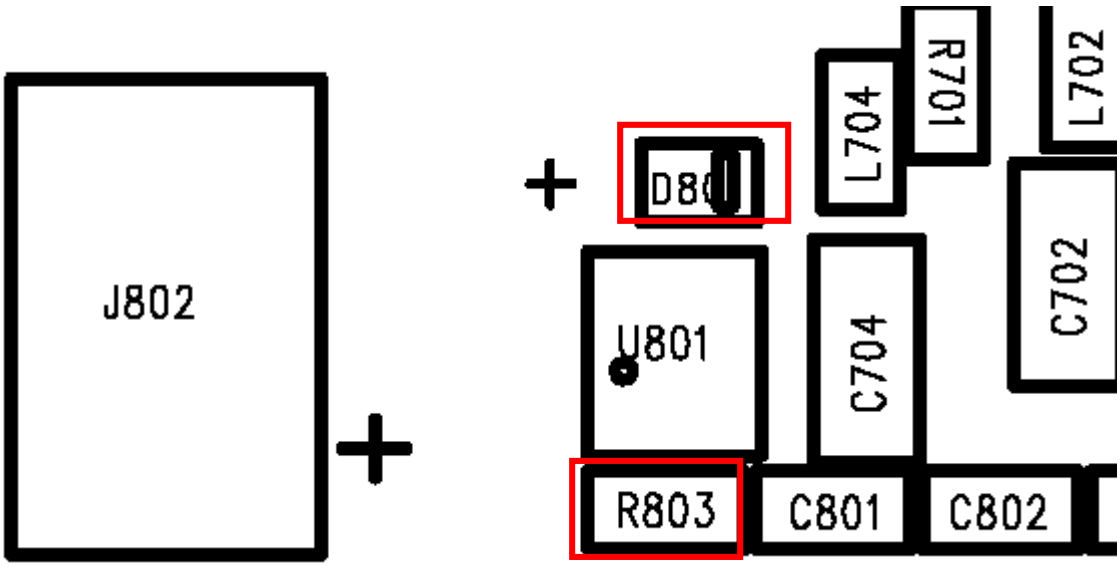

Circuit Diagram

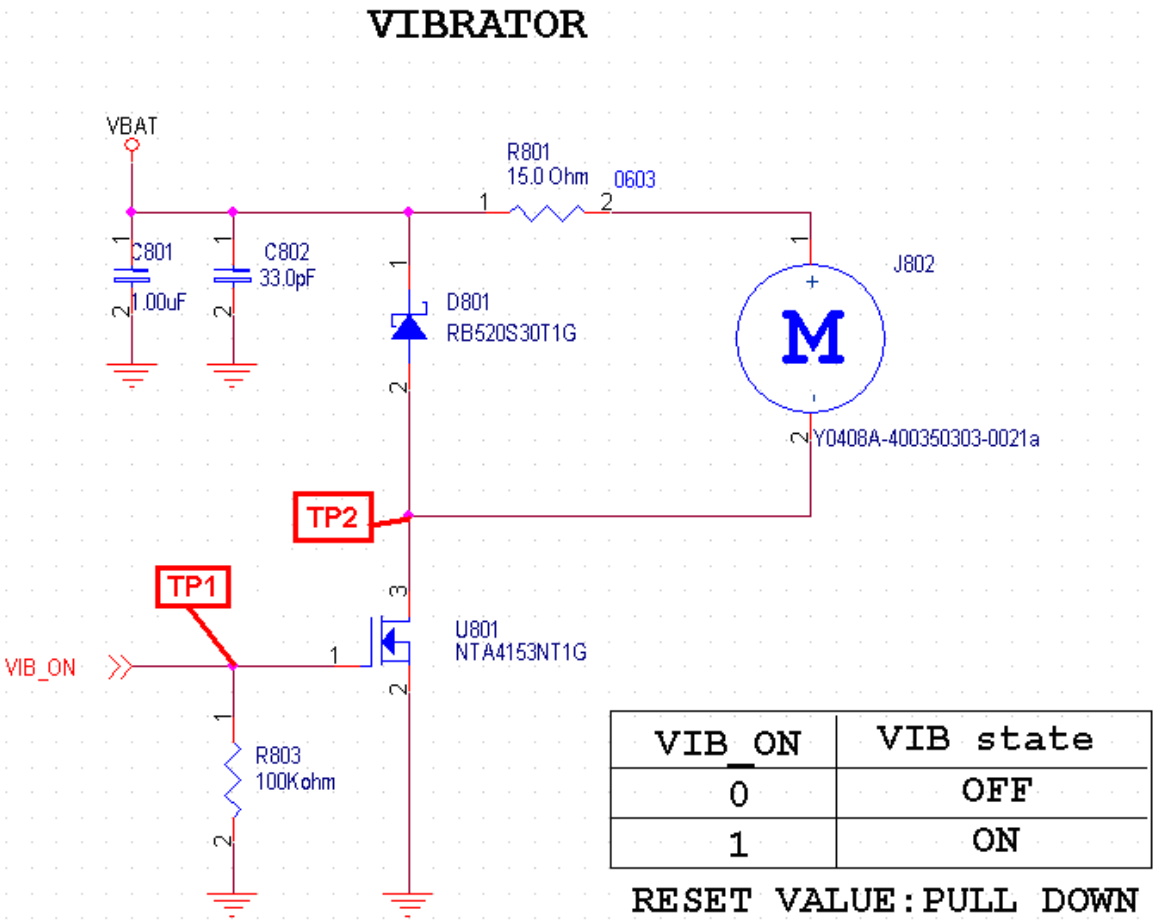

VIB_ON	VIB state
0	OFF
1	ON

RESET VALUE:PULL DOWN

Checking Flow:

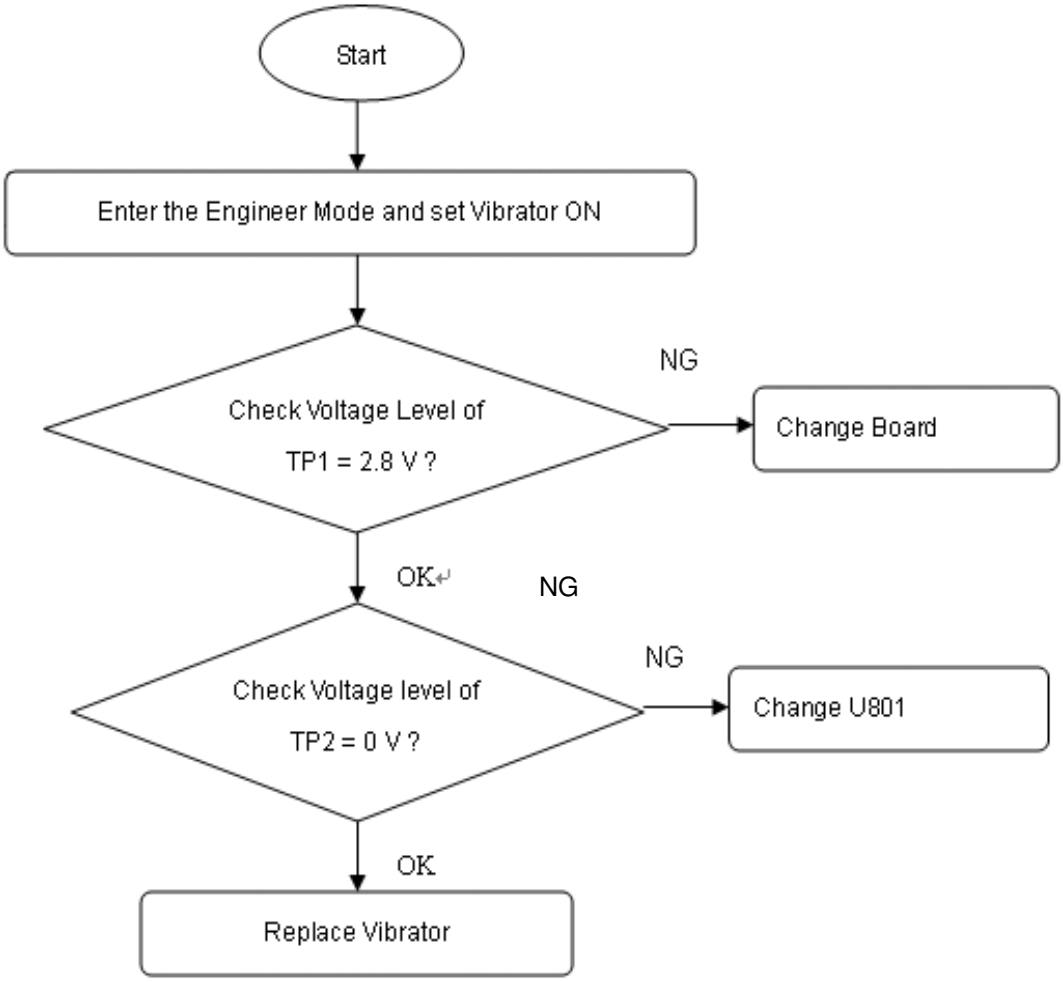

4.4 Keypad Trouble

Test Point

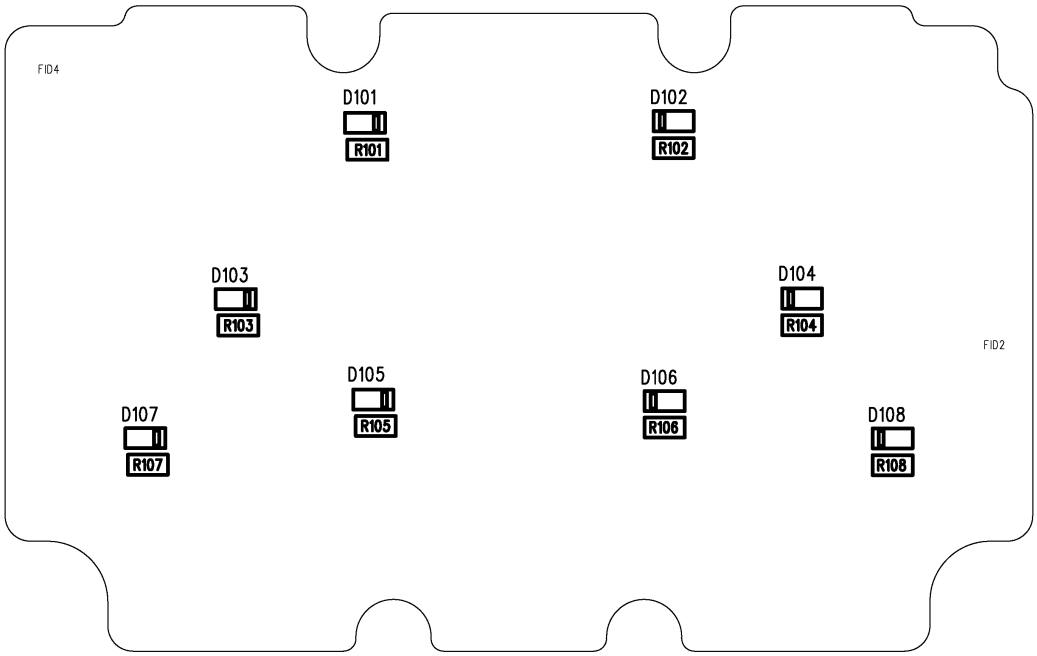

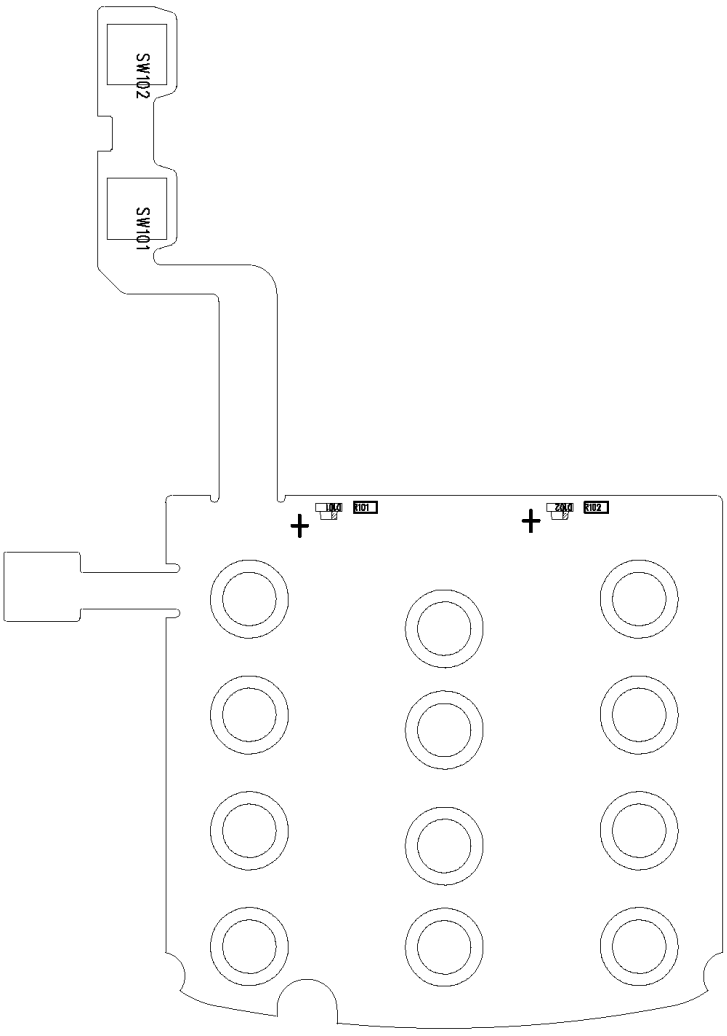

Circuit Diagram

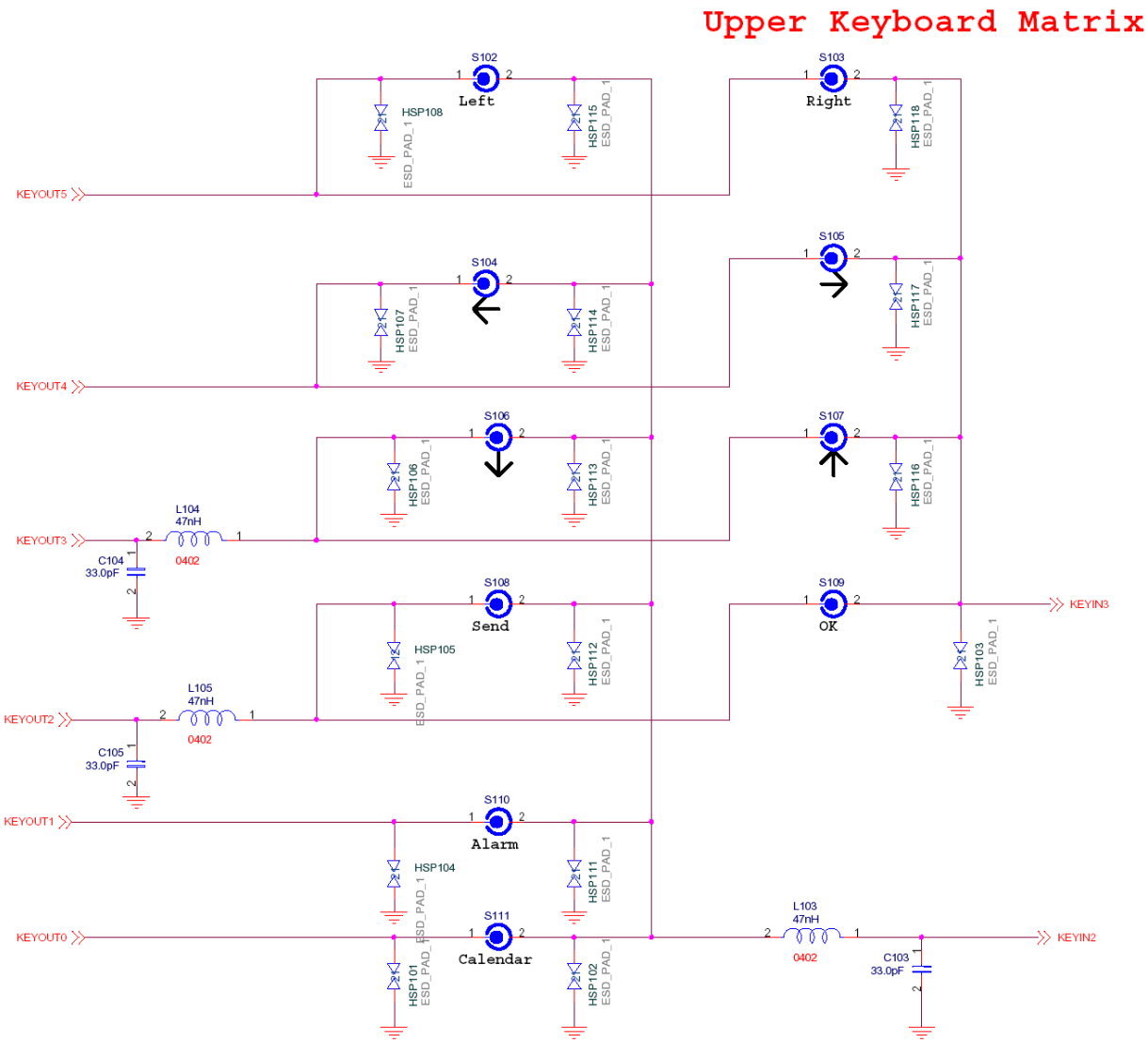

Main Keyboard Matrix

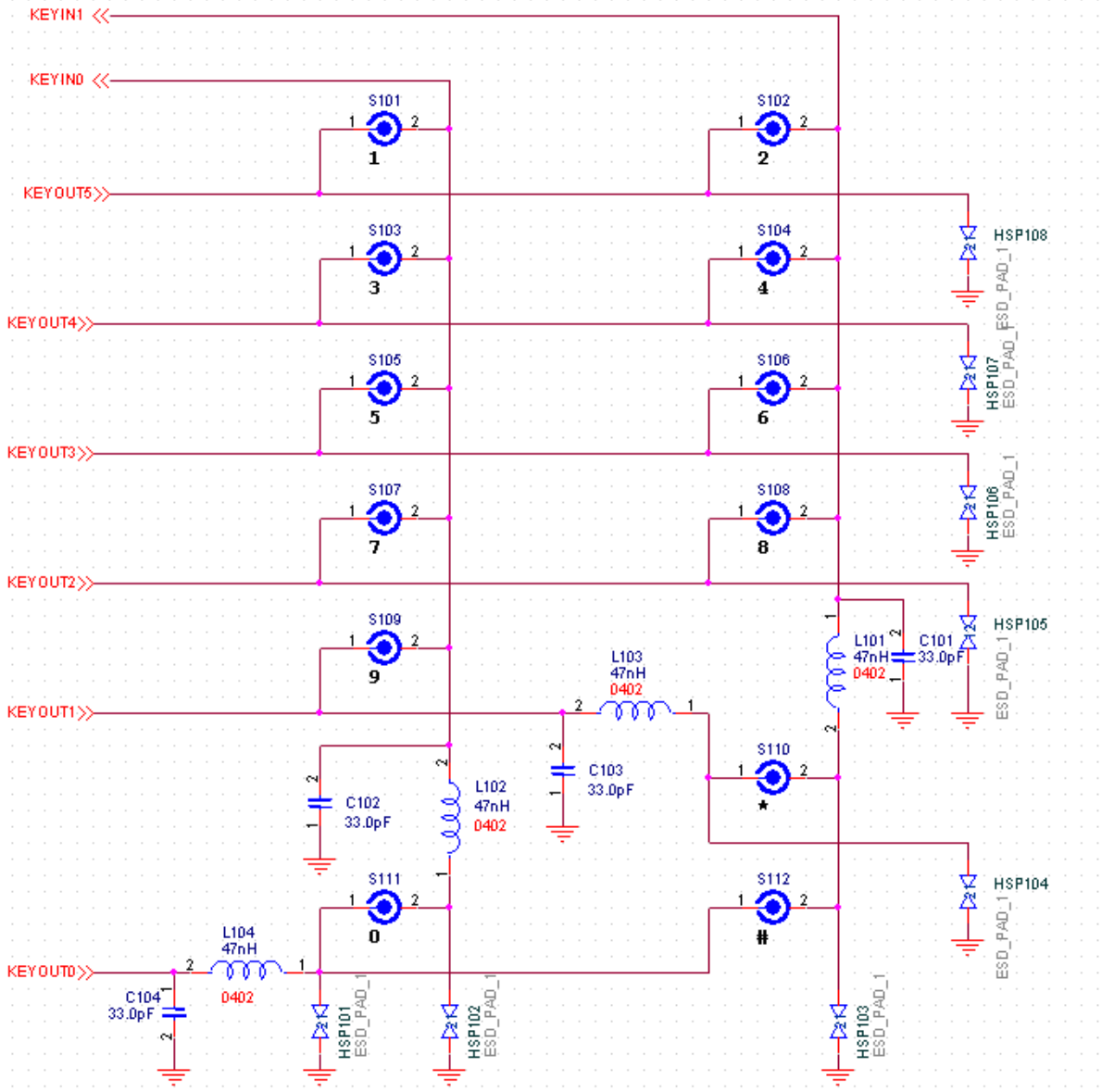

Checking Flow

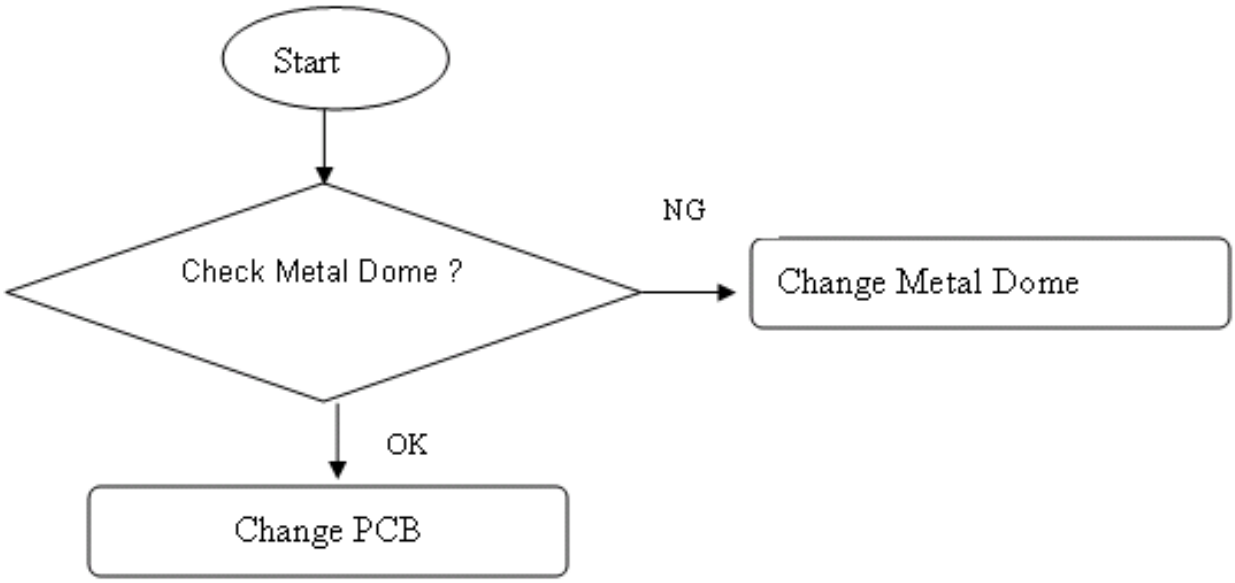

4.5 RTC Trouble

Test Point

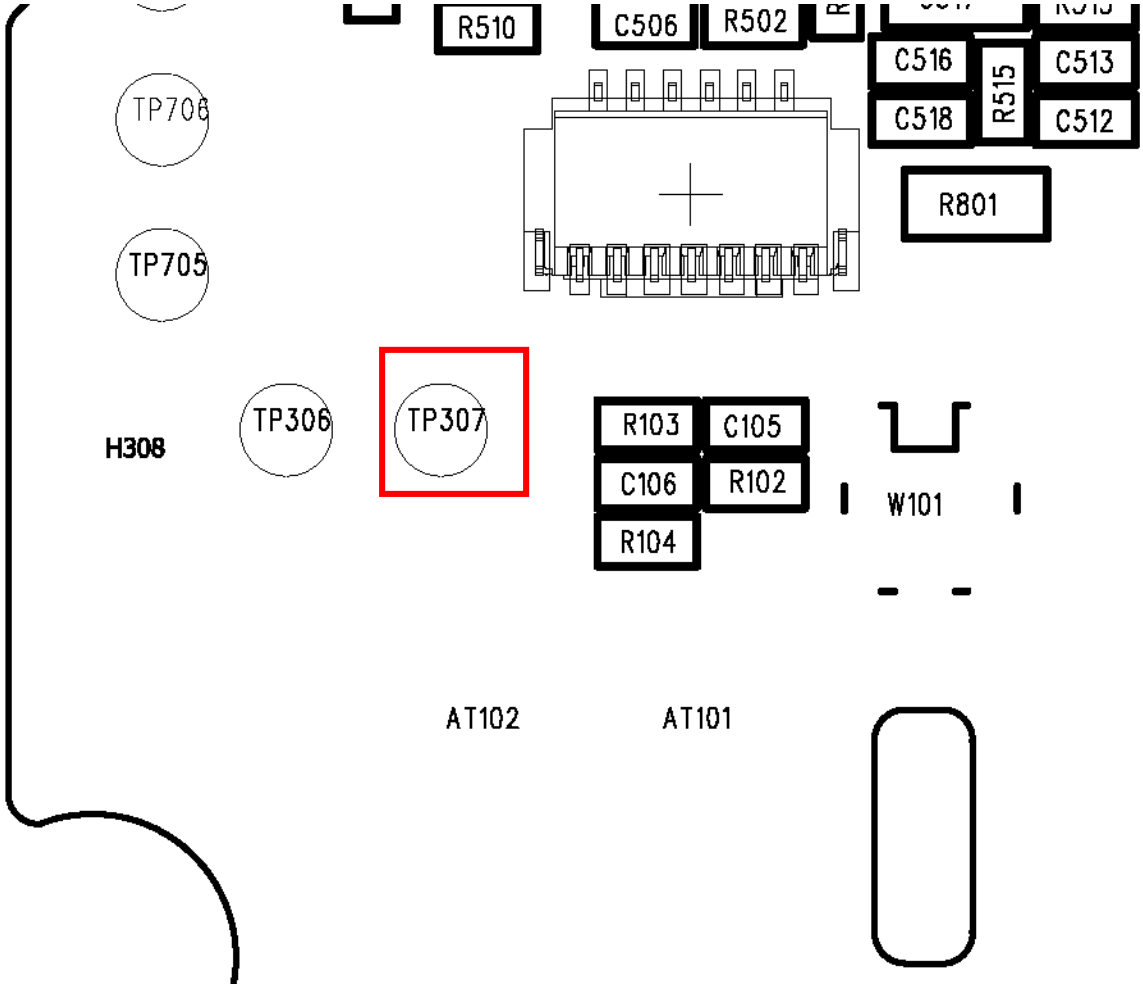

Circuit Diagram

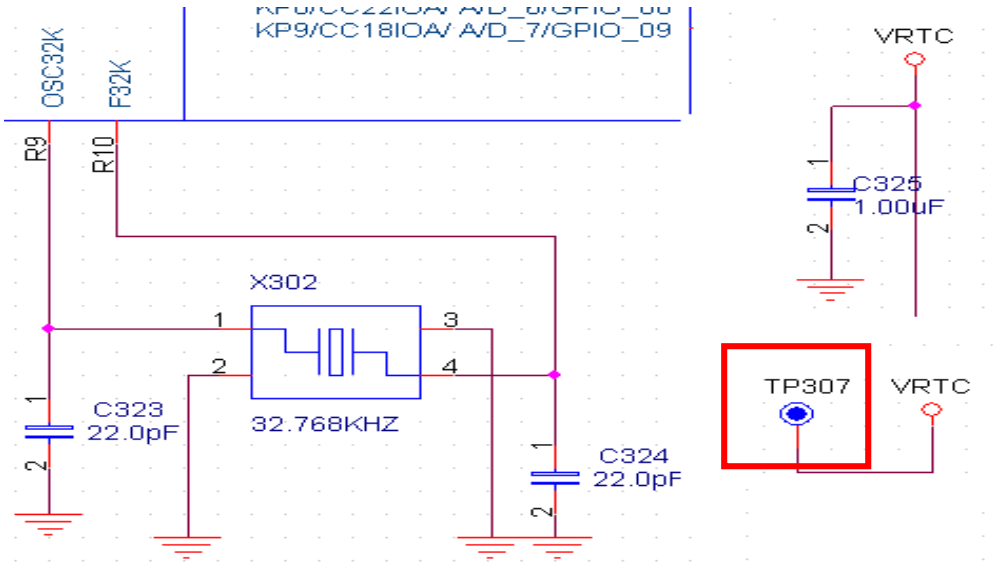

Checking Flow

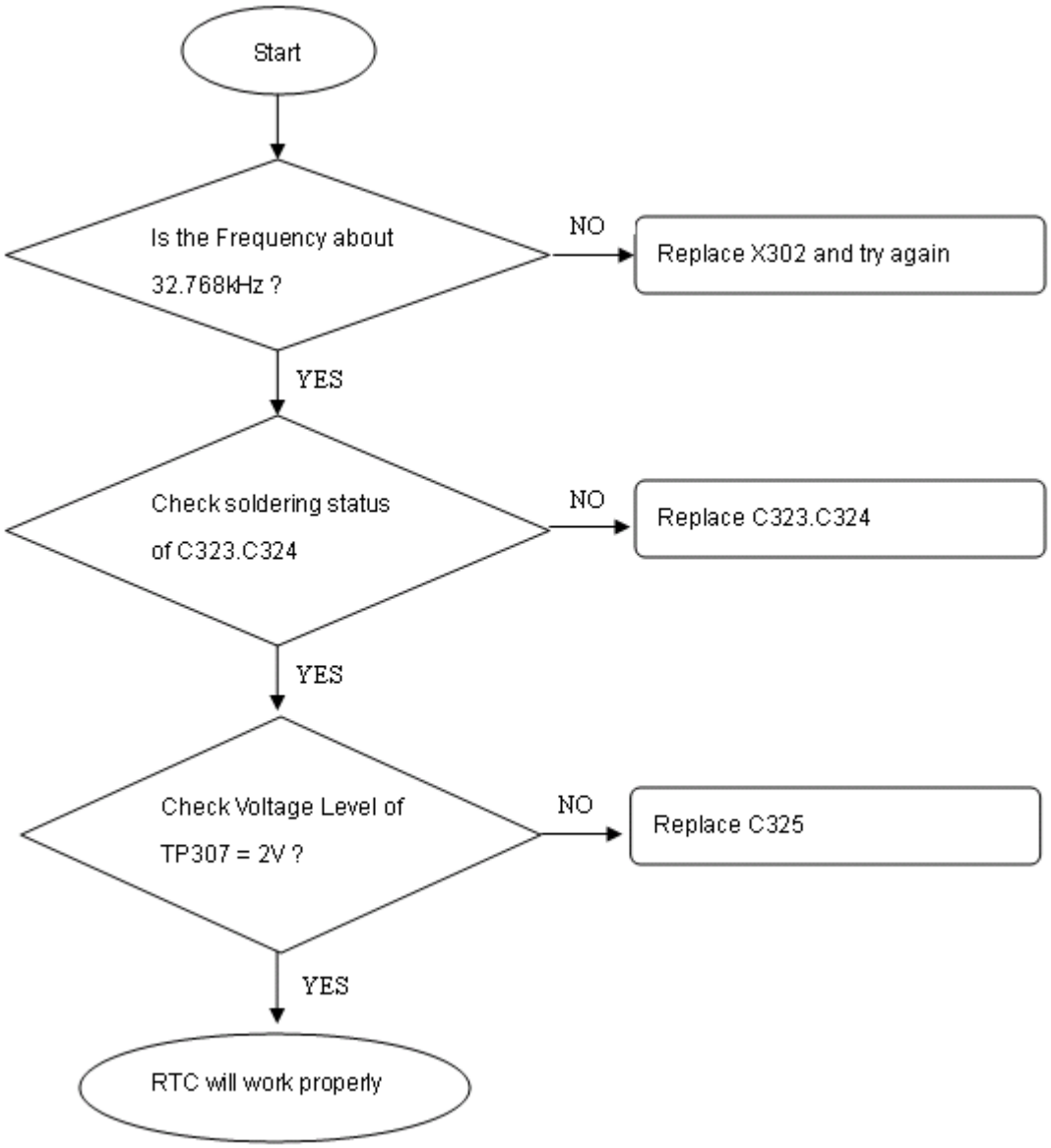

4.6 Key Backlight Trouble

4.6.1 Main Key Board LED

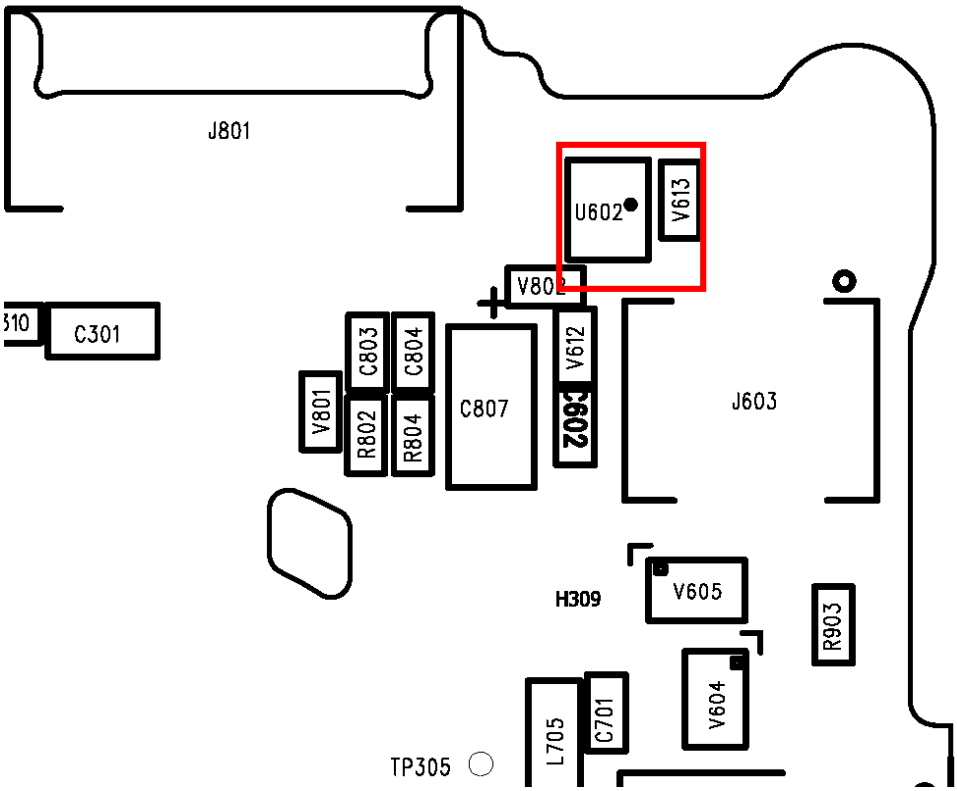

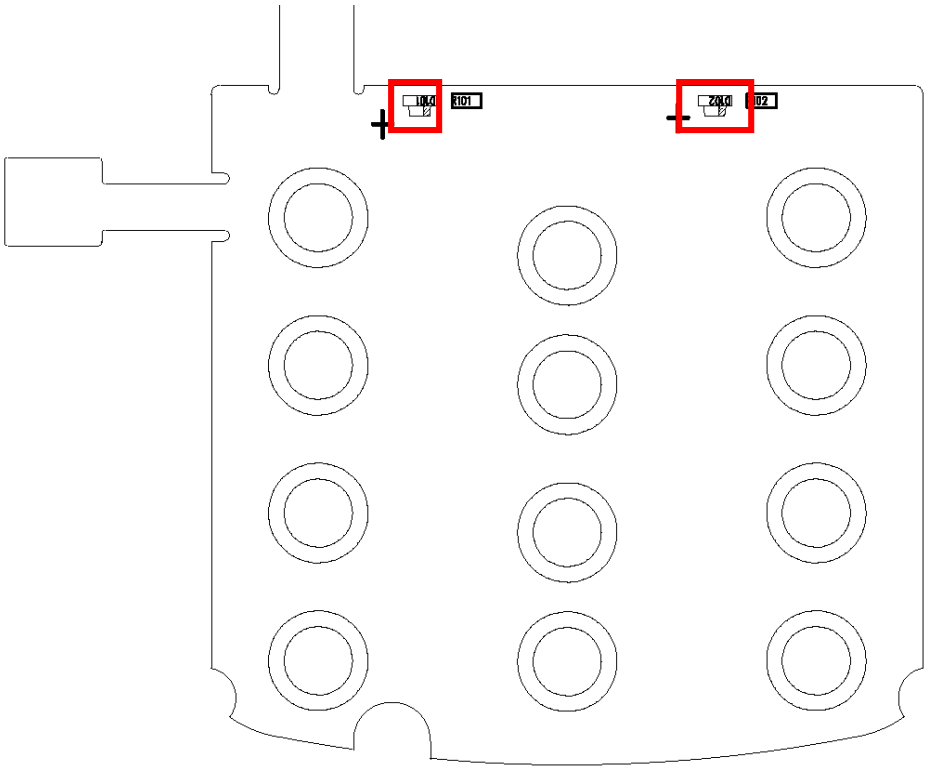

Circuit Diagram

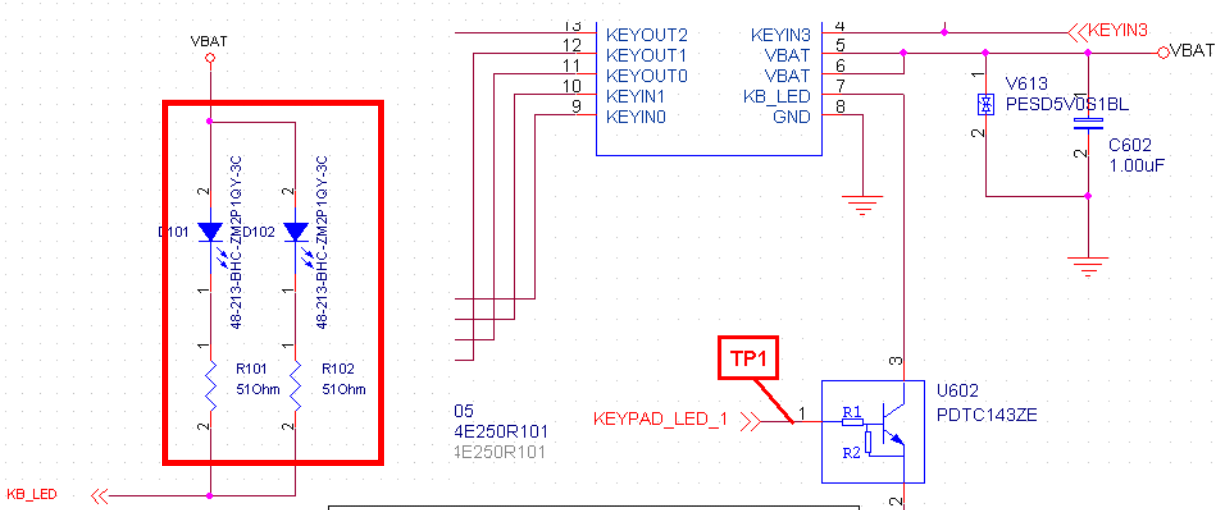

KEYPAD_LED_1	KEYPAD1 LED
0	OFF
1	ON

RESET VALUE:PULL DOWN

Checking Flow

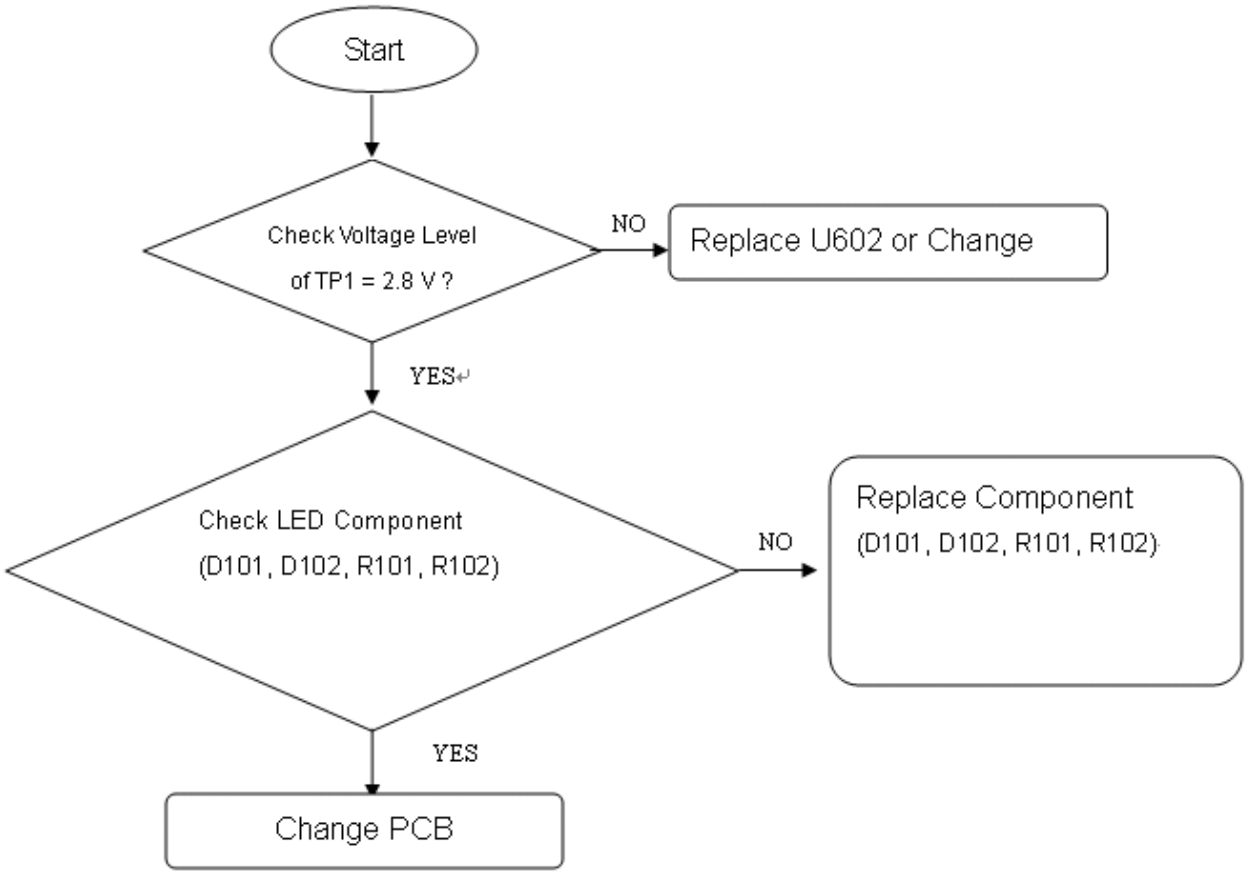

4.6.2 Upper Key Board LED

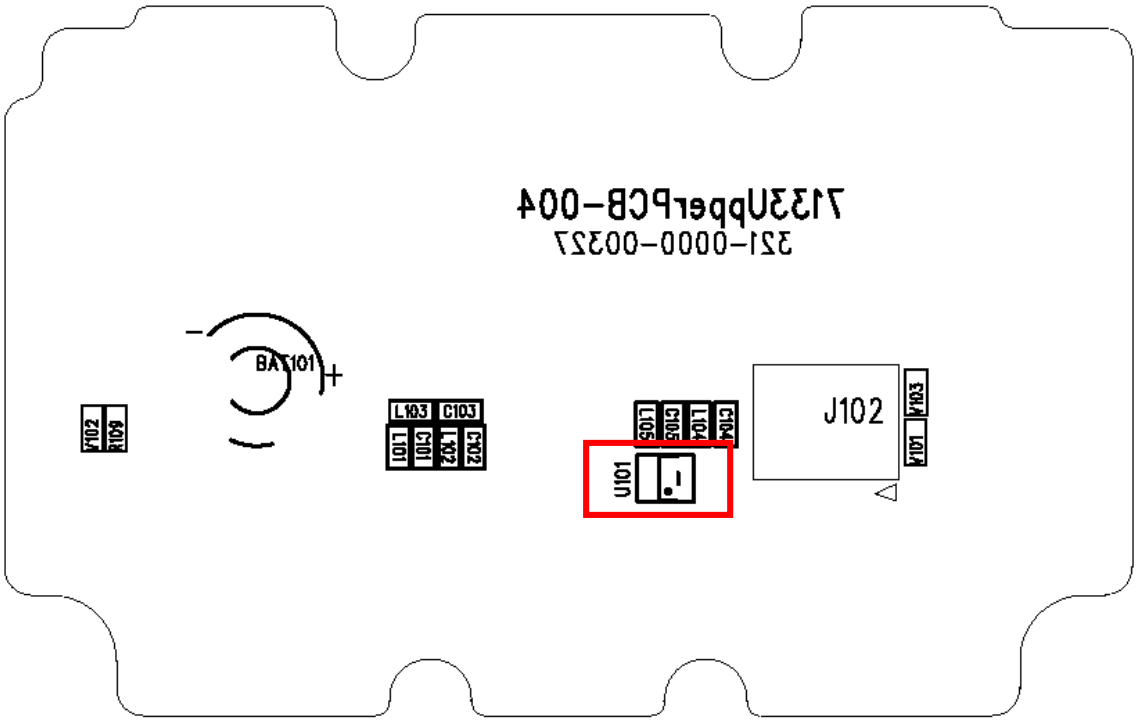

Circuit Diagram

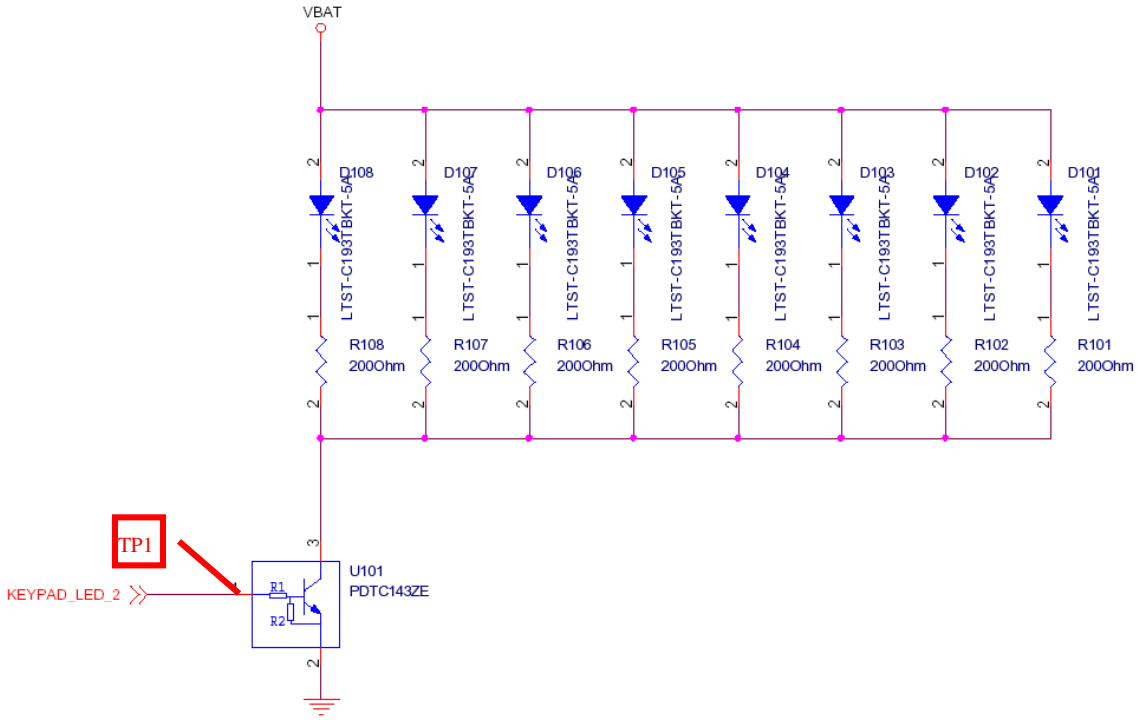

Checking Flow

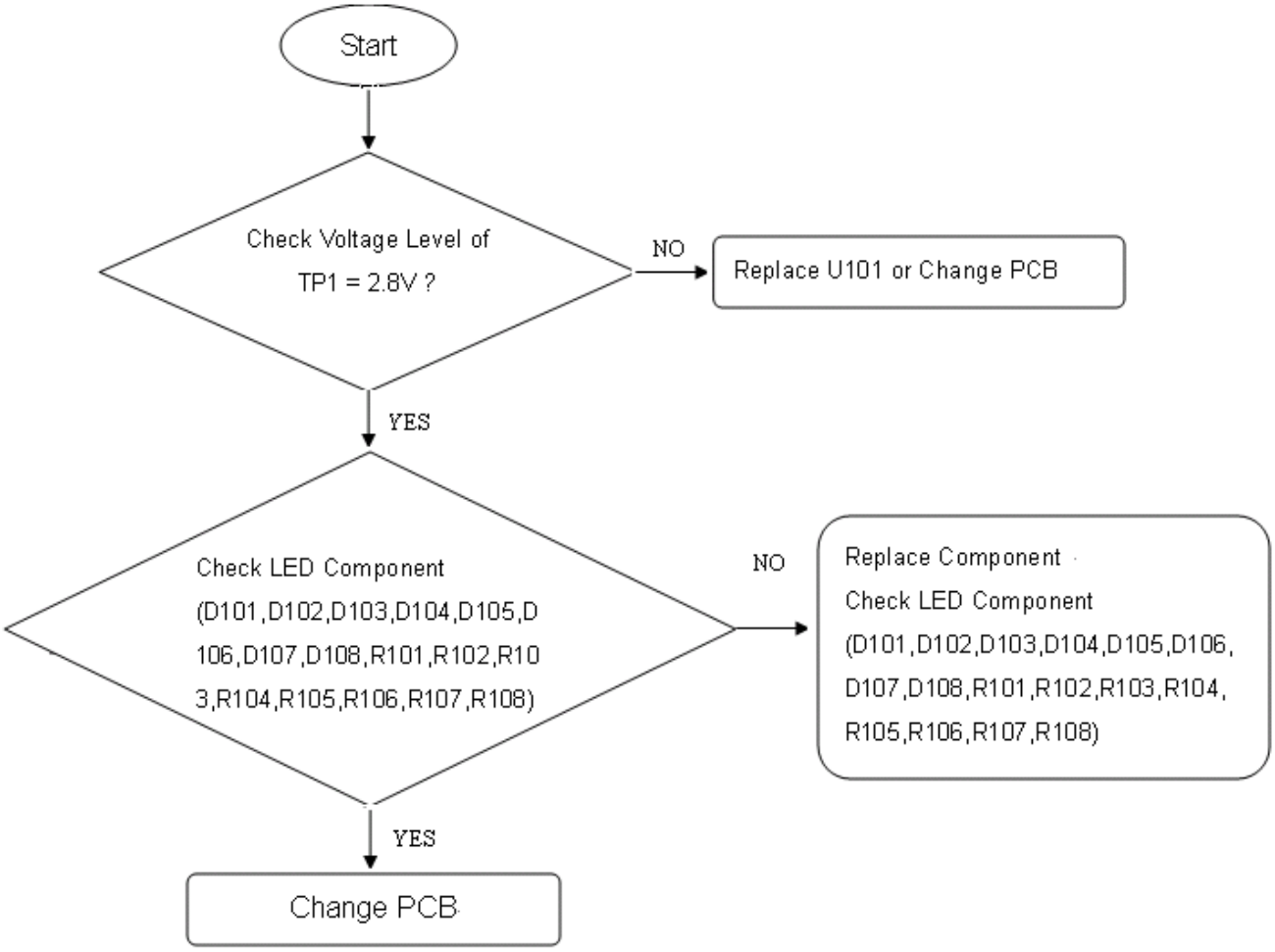

4.7 LCM Backlight Trouble

Test Point

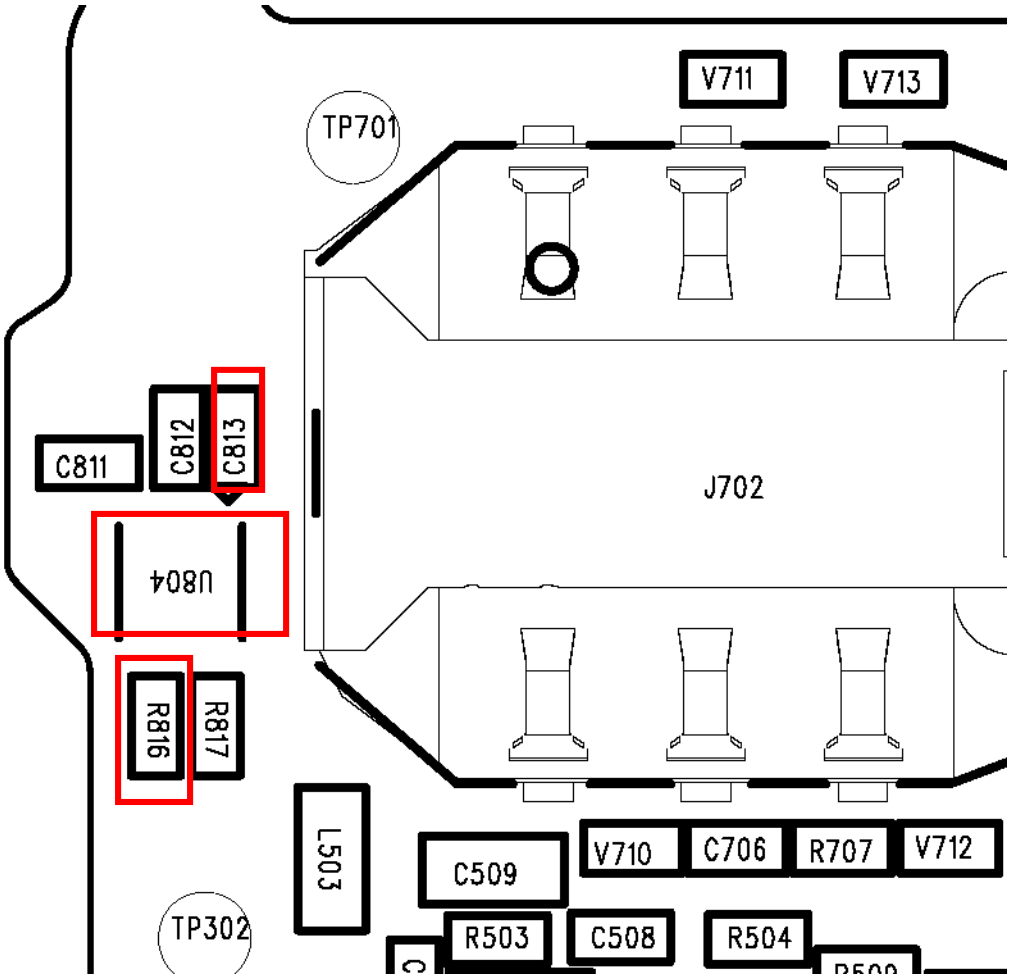

Circuit Diagram

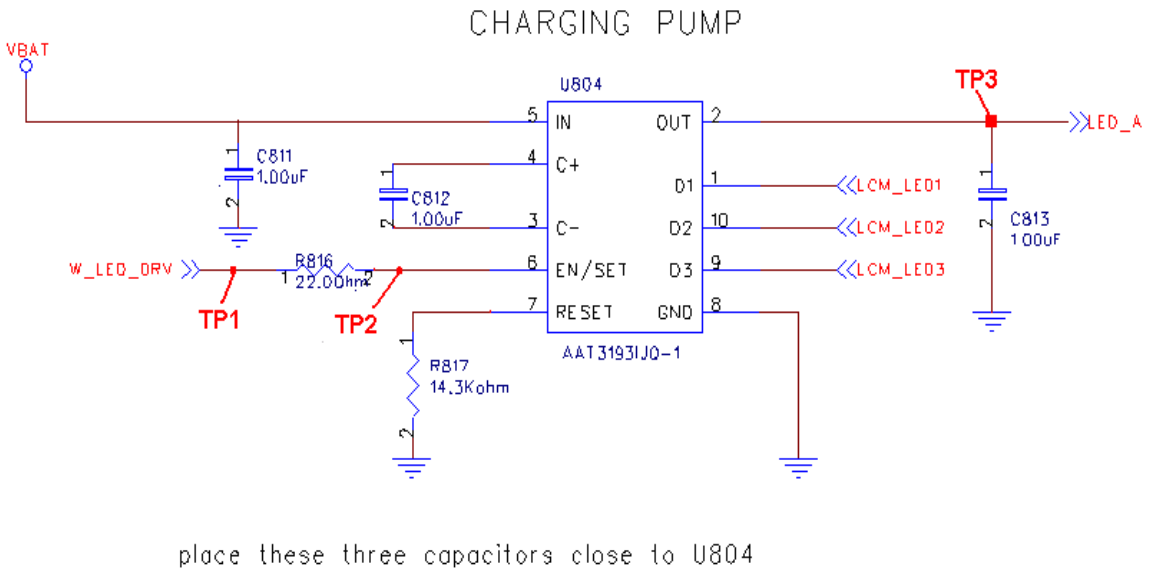

Checking Flow

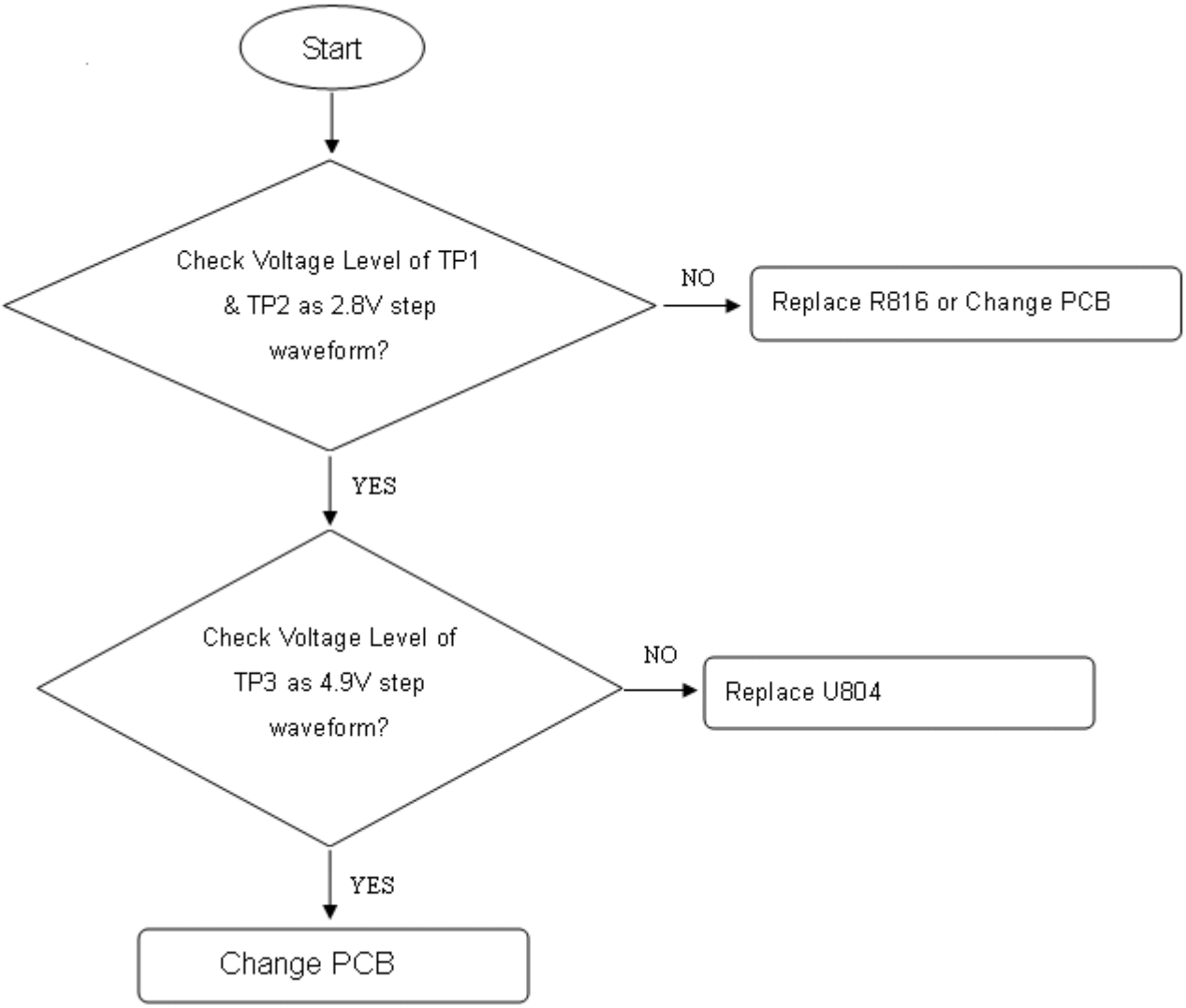

4.8 LCM Trouble

Test Point

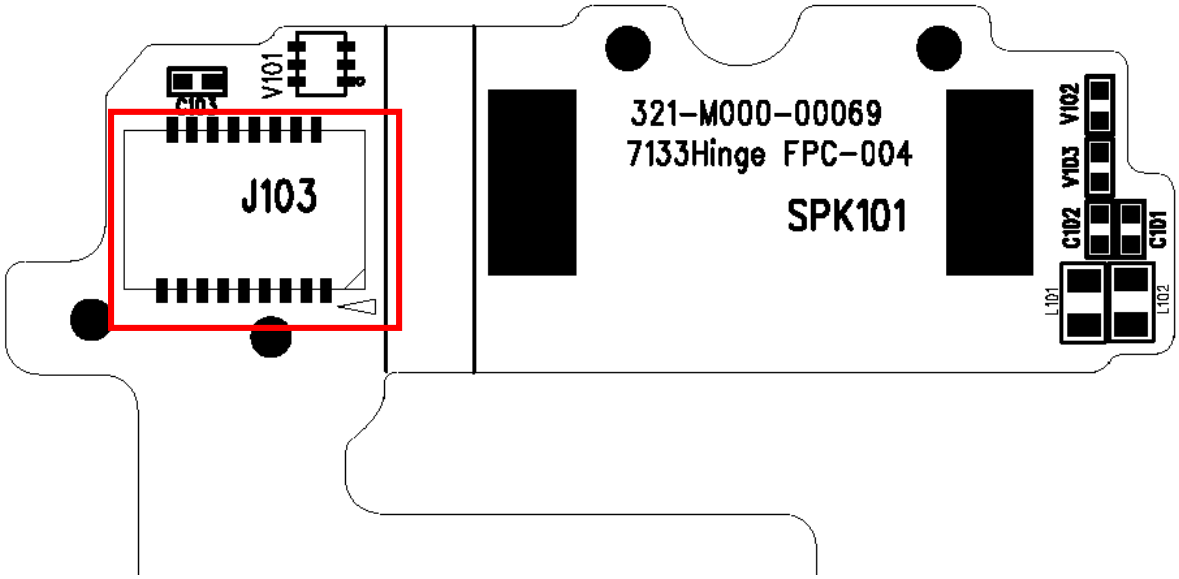

Circuit Diagram

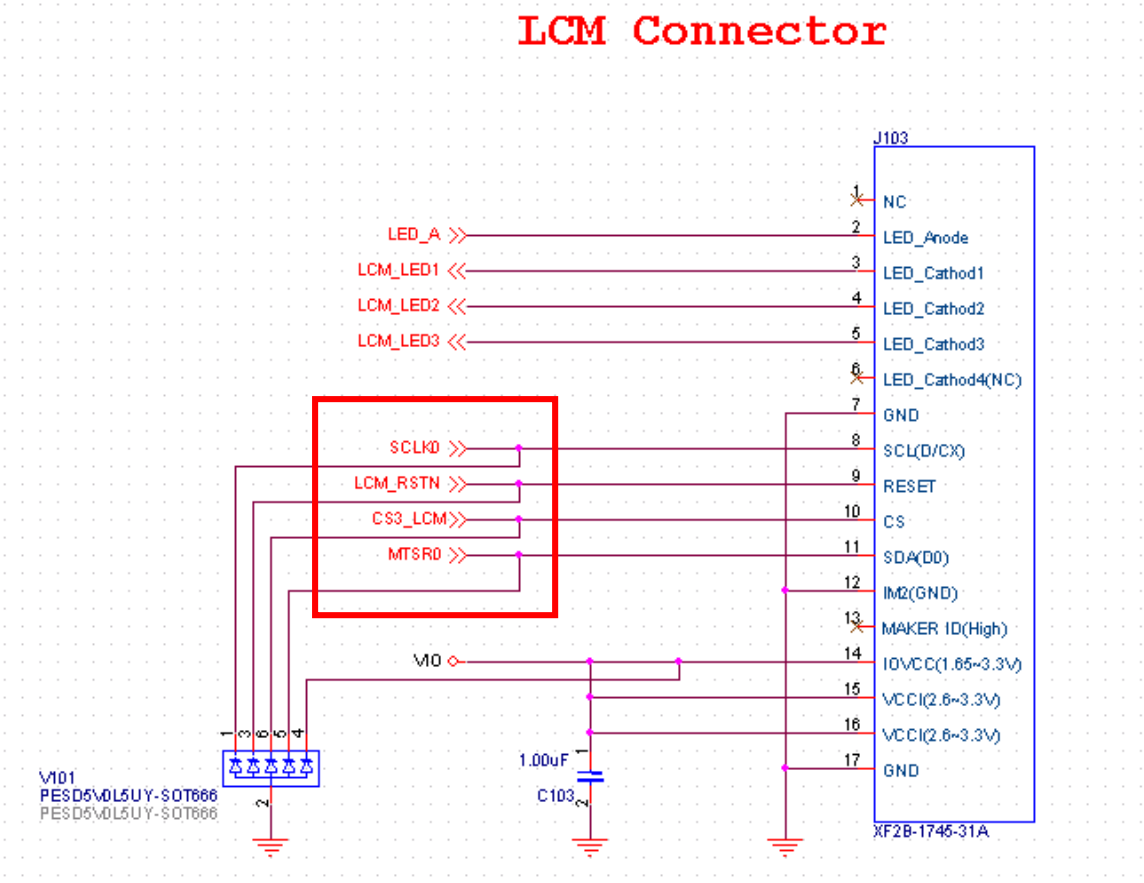

Checking Flow

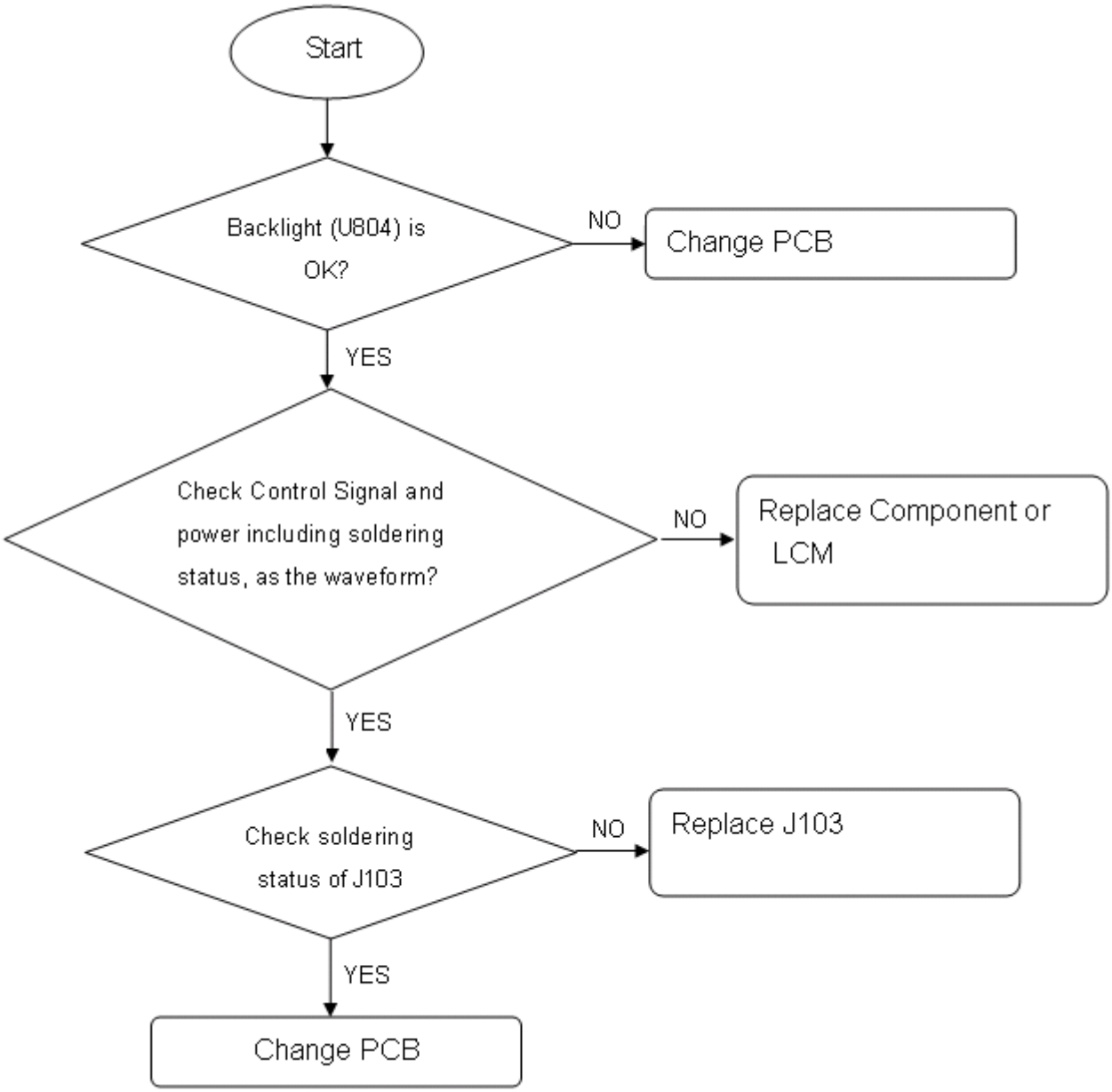

4.9 Microphone Trouble

Test Point

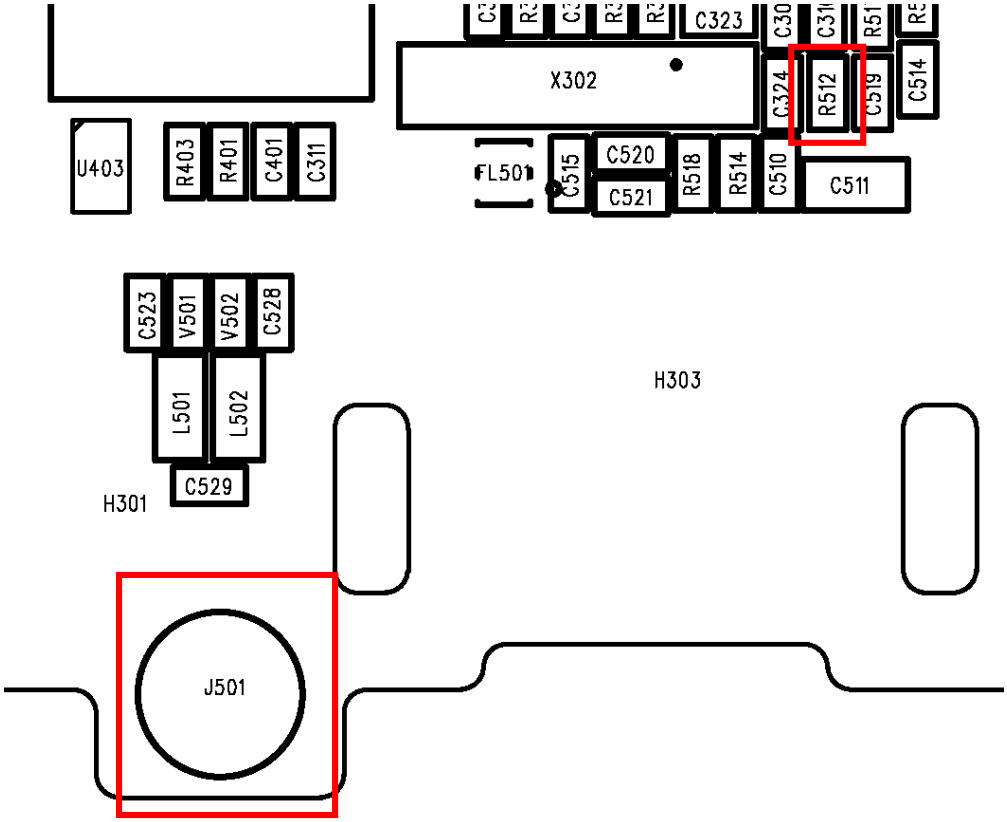

Circuit Diagram

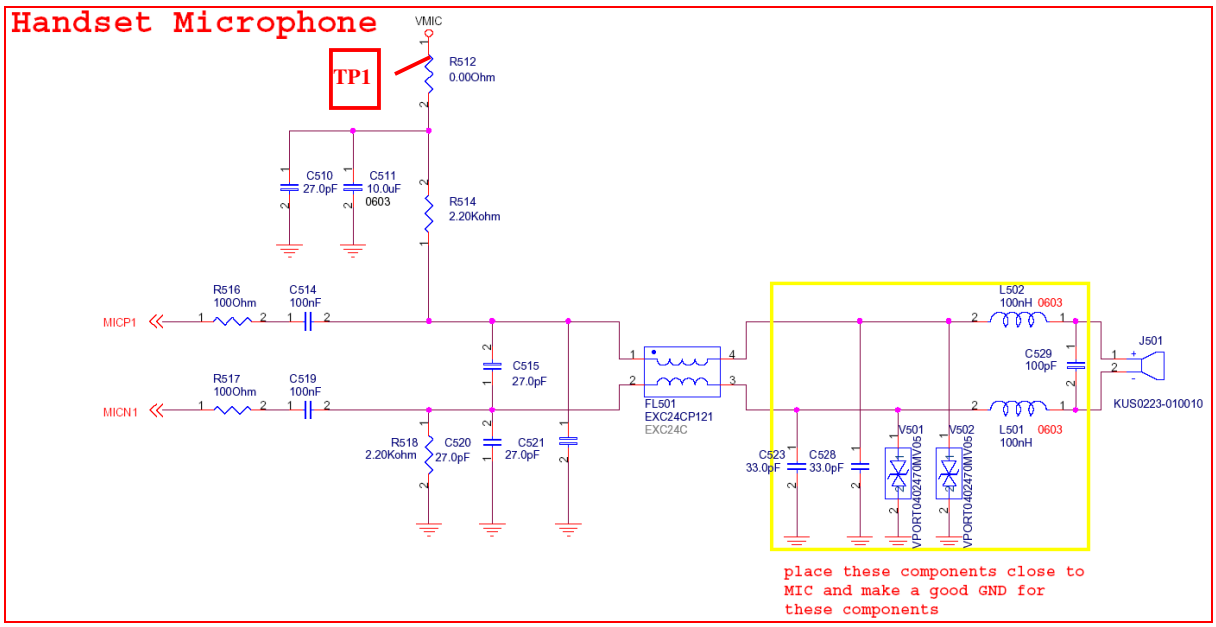

Checking Flow

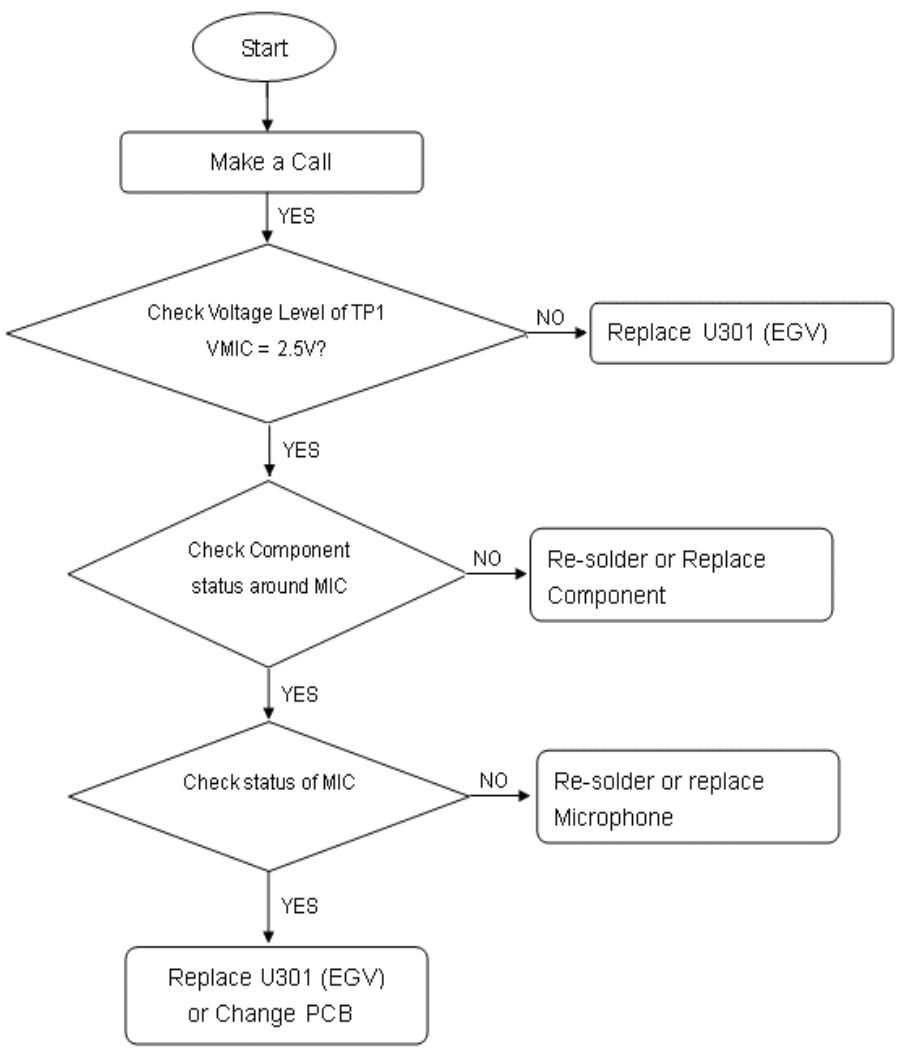

4.10 Receiver Trouble

Test Point

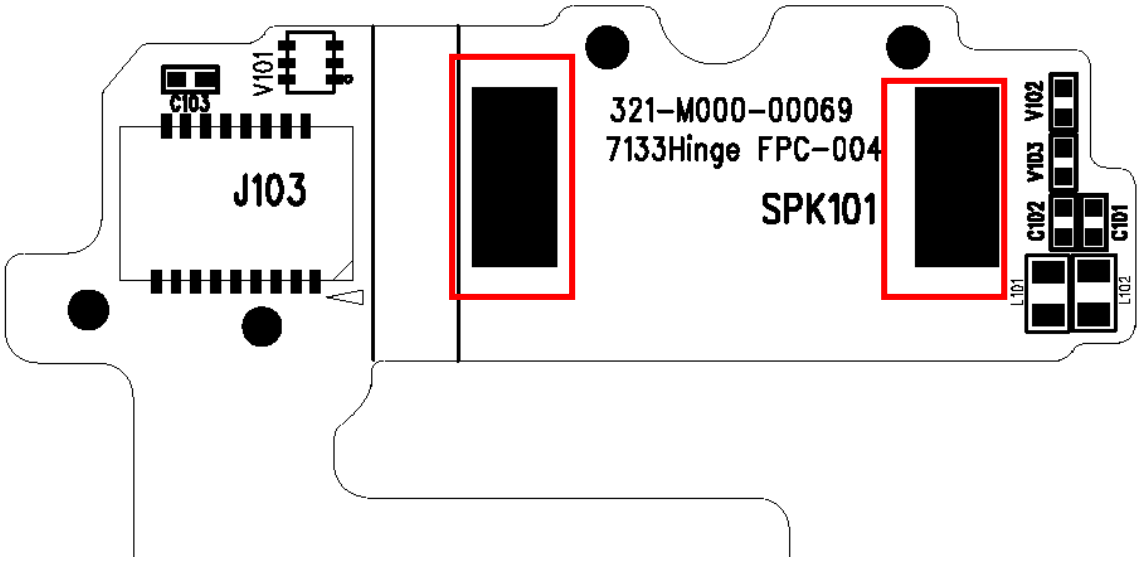

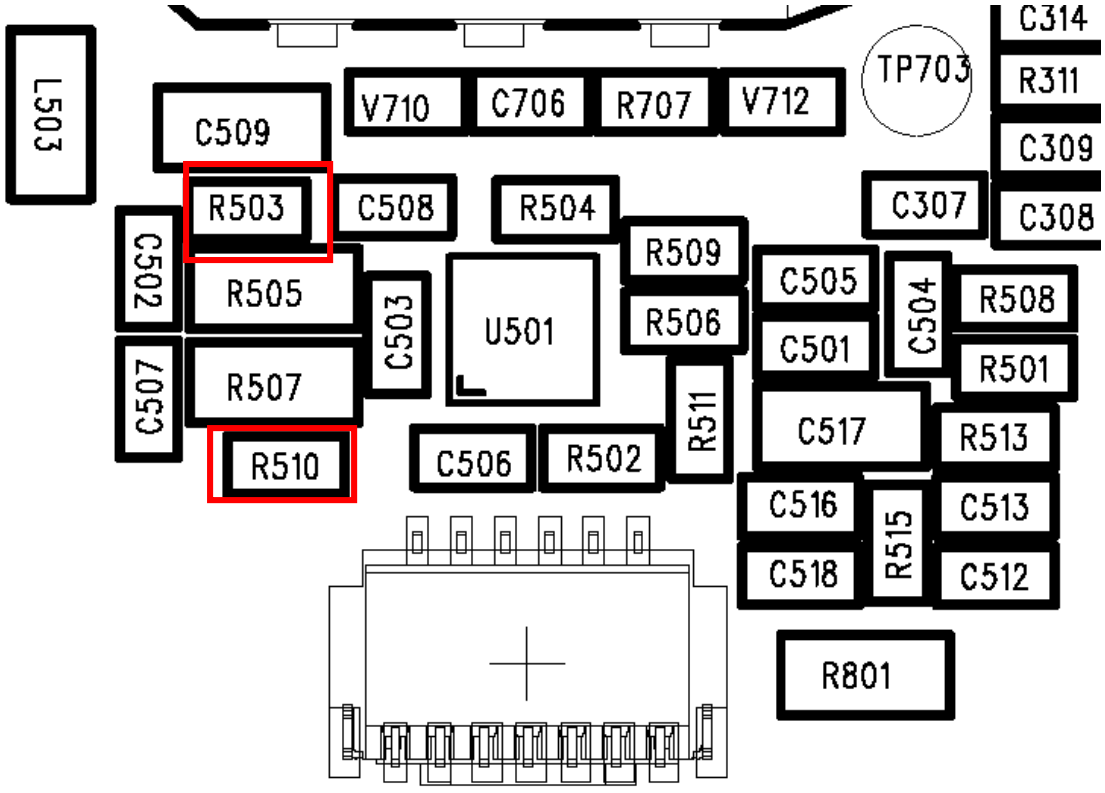

Circuit Diagram

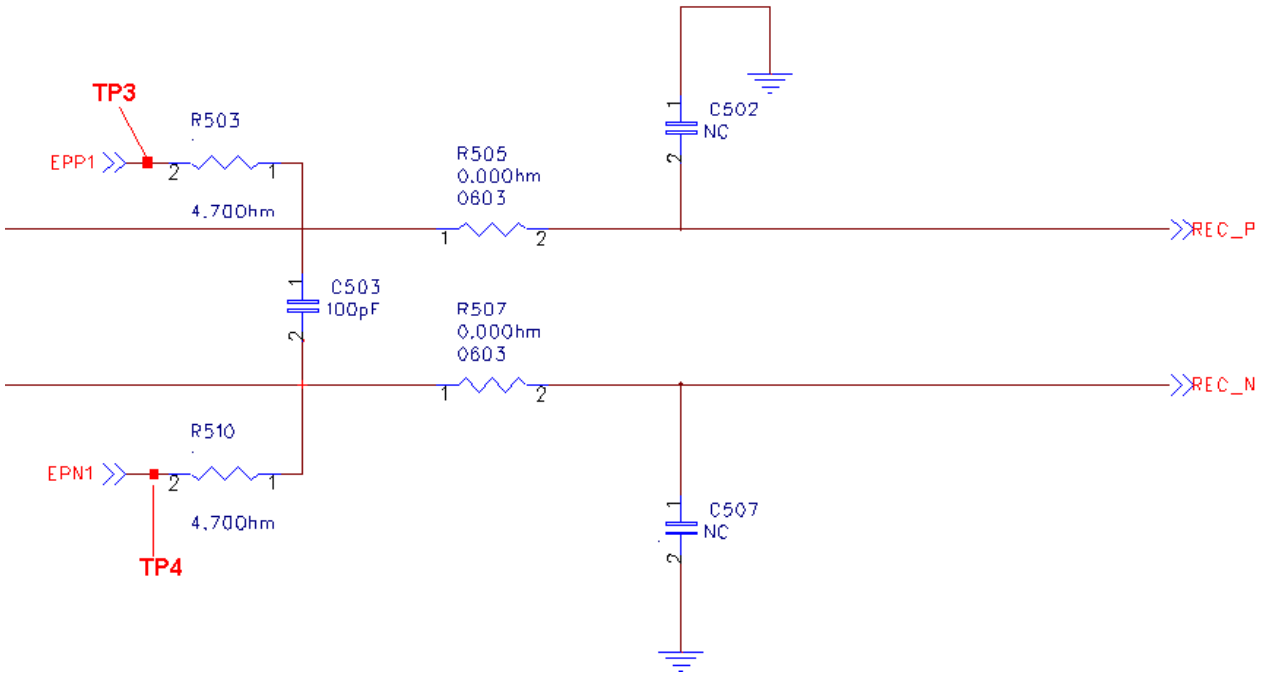

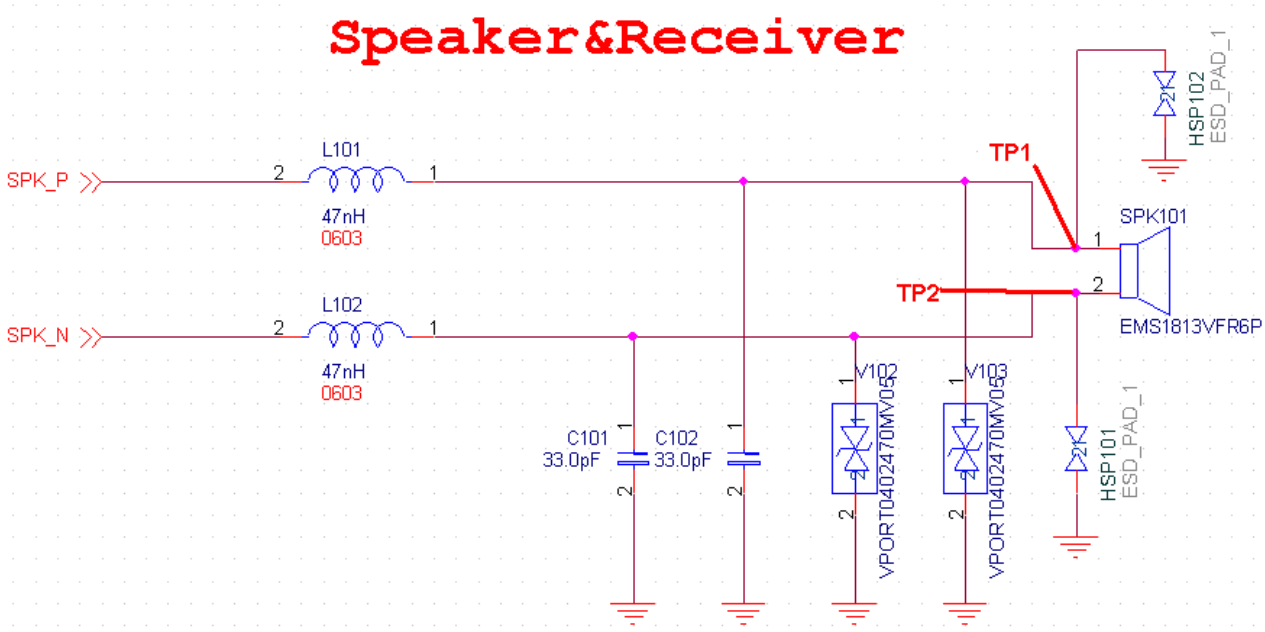

Checking Flow

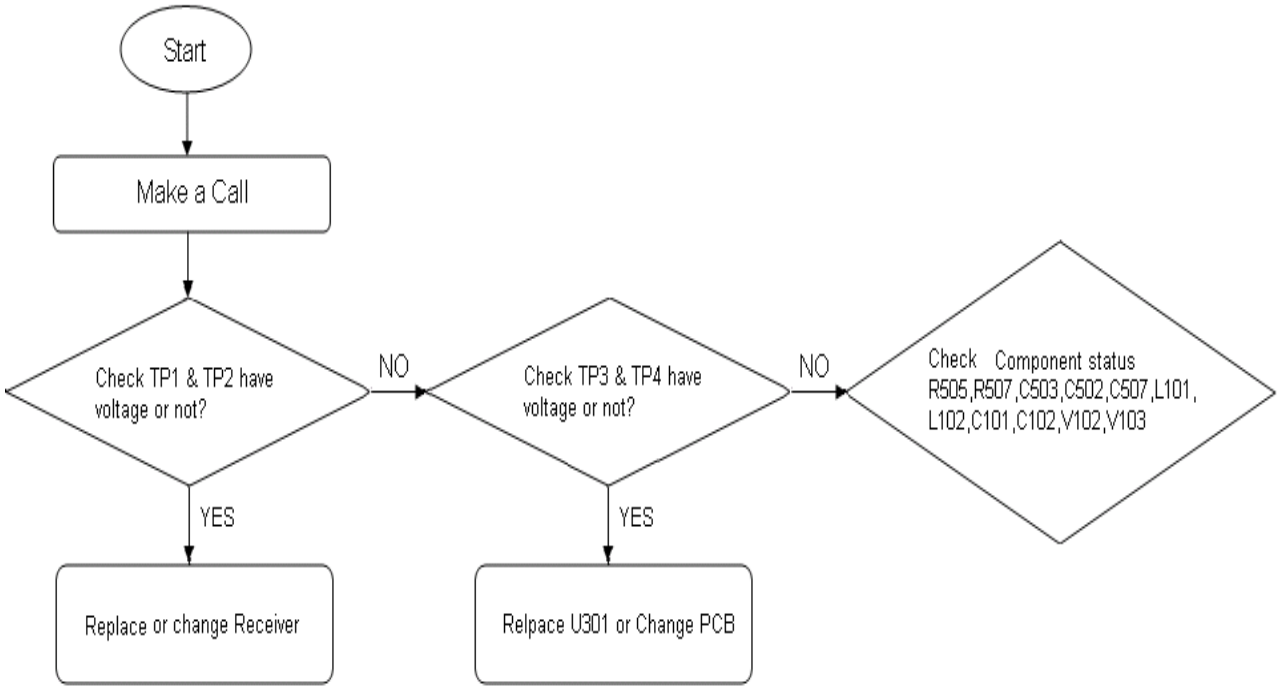

4.11 Speaker Trouble

Test Point

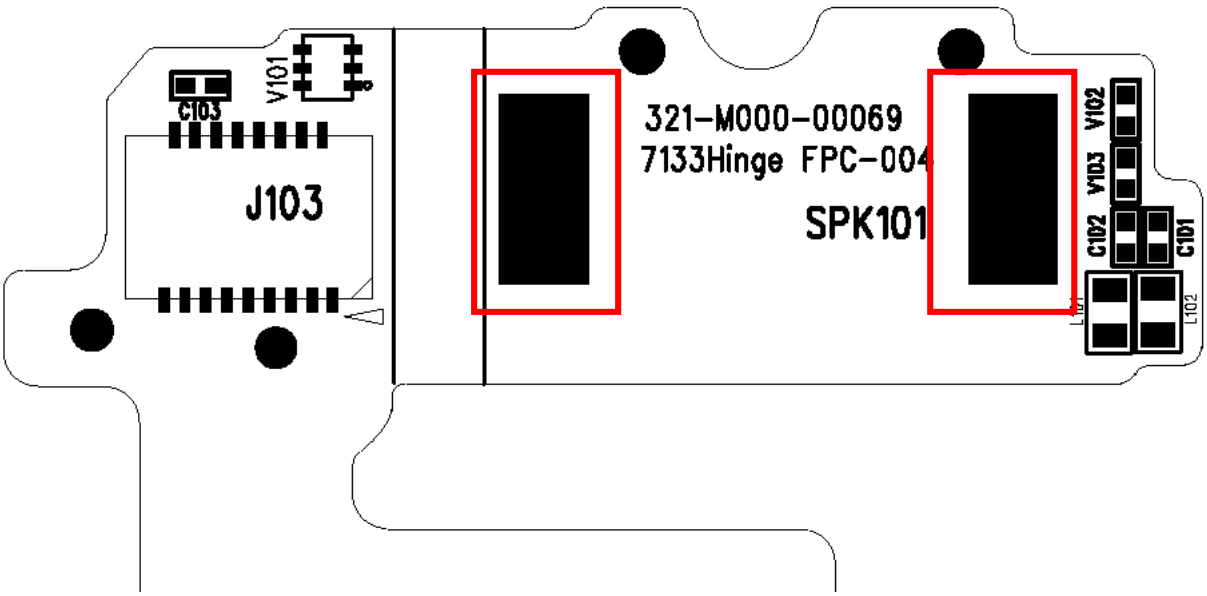

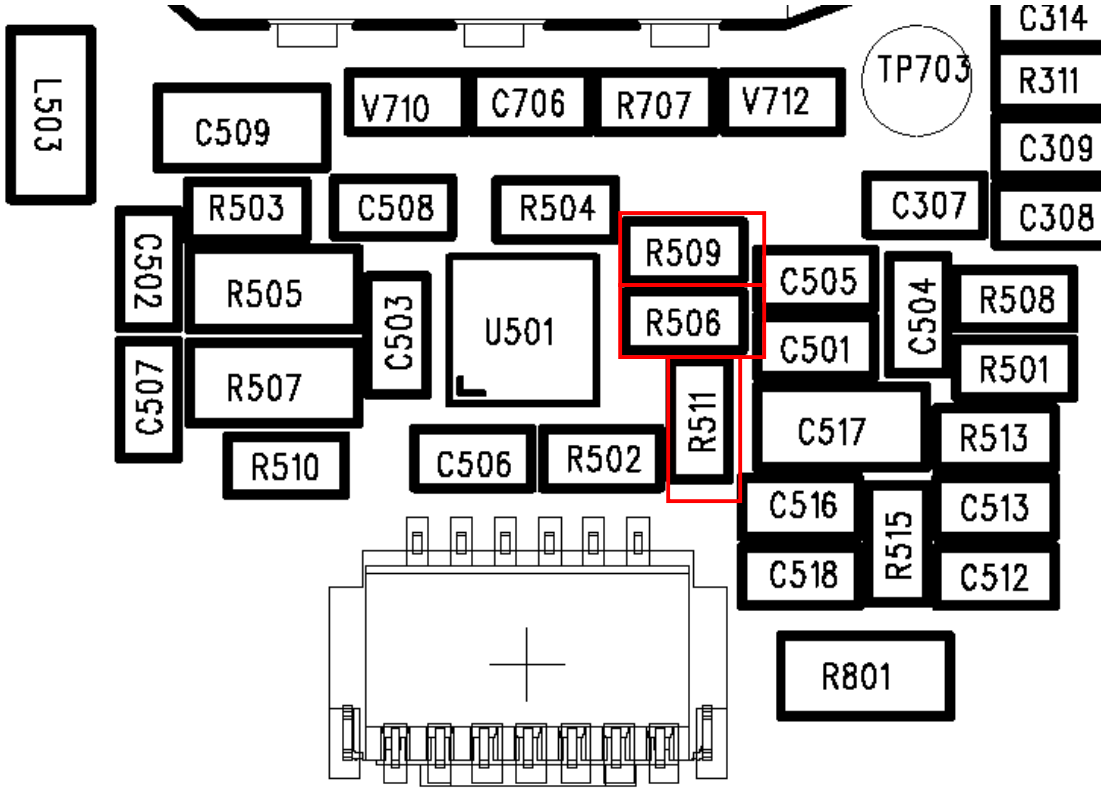

Circuit Diagram

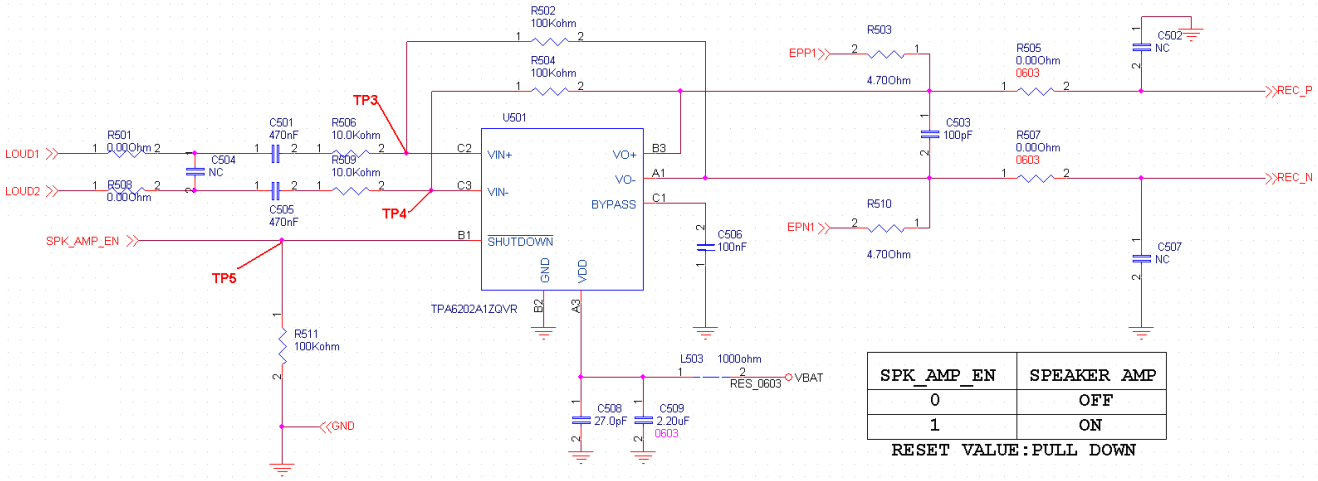

SPK_AMP_EN	SPEAKER AMP
0	OFF
1	ON

RESET VALUE:PULL DOWN

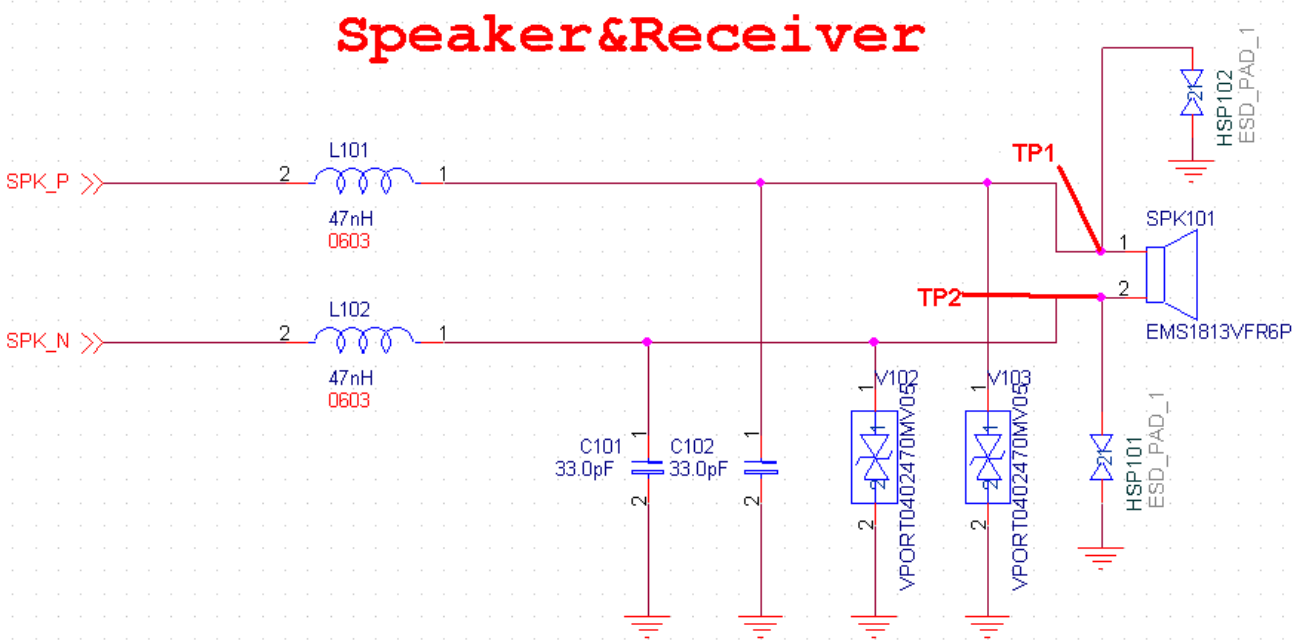

Checking Flow

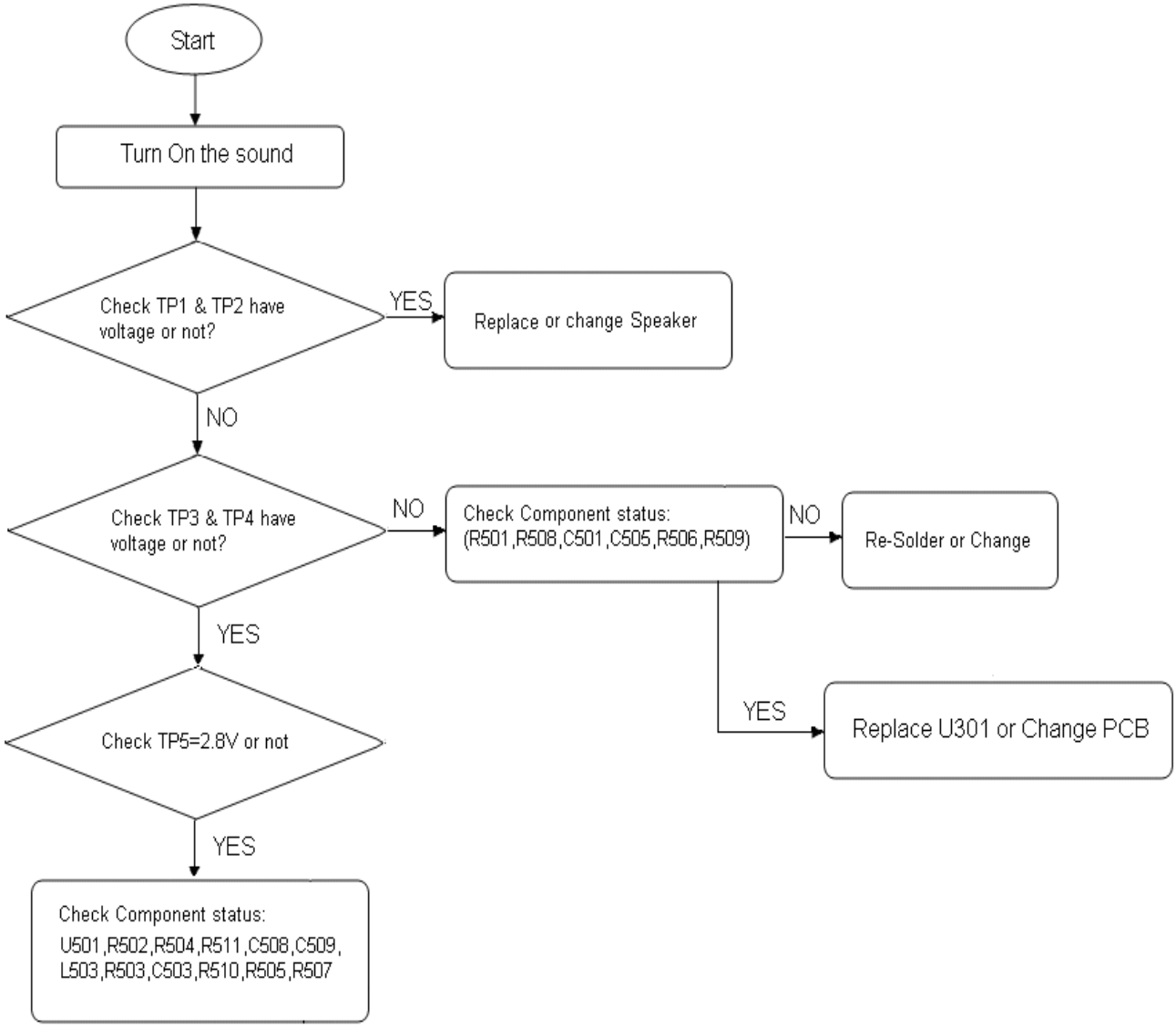

4.12 Headphone Trouble

Test Point

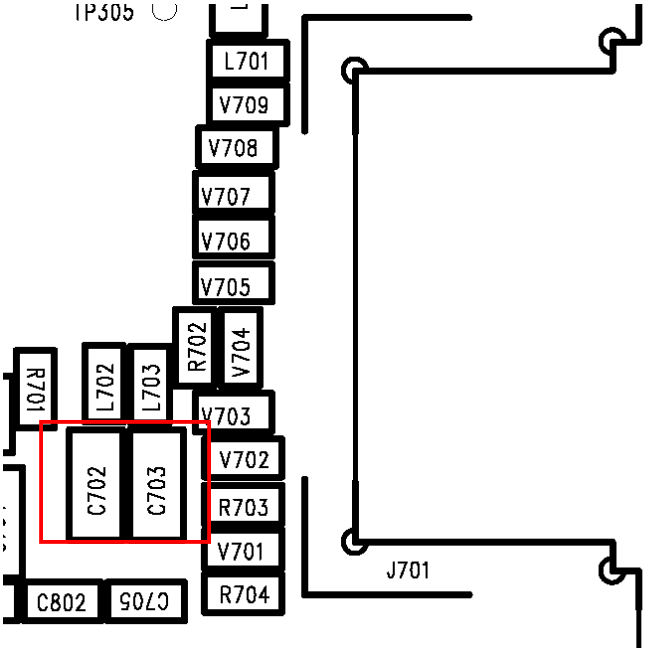

Circuit Diagram

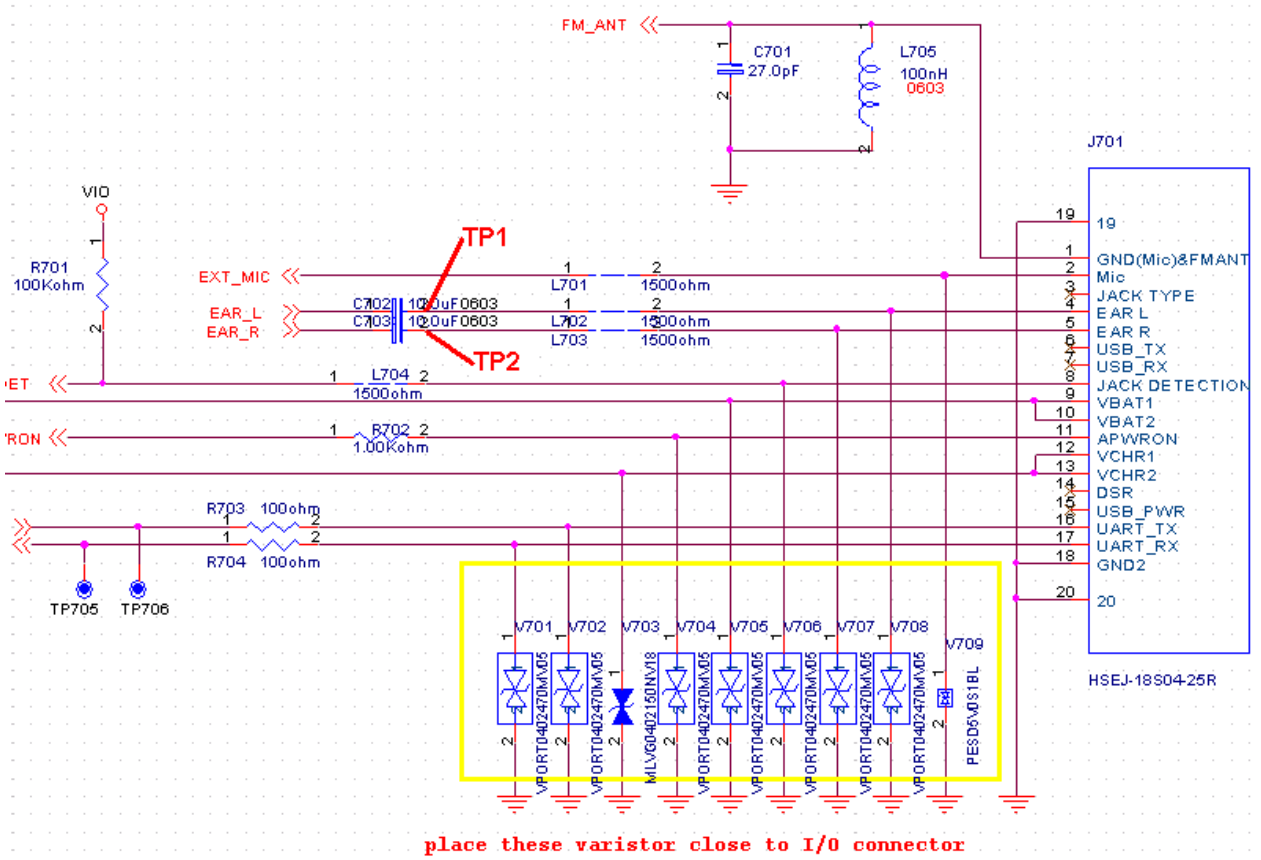

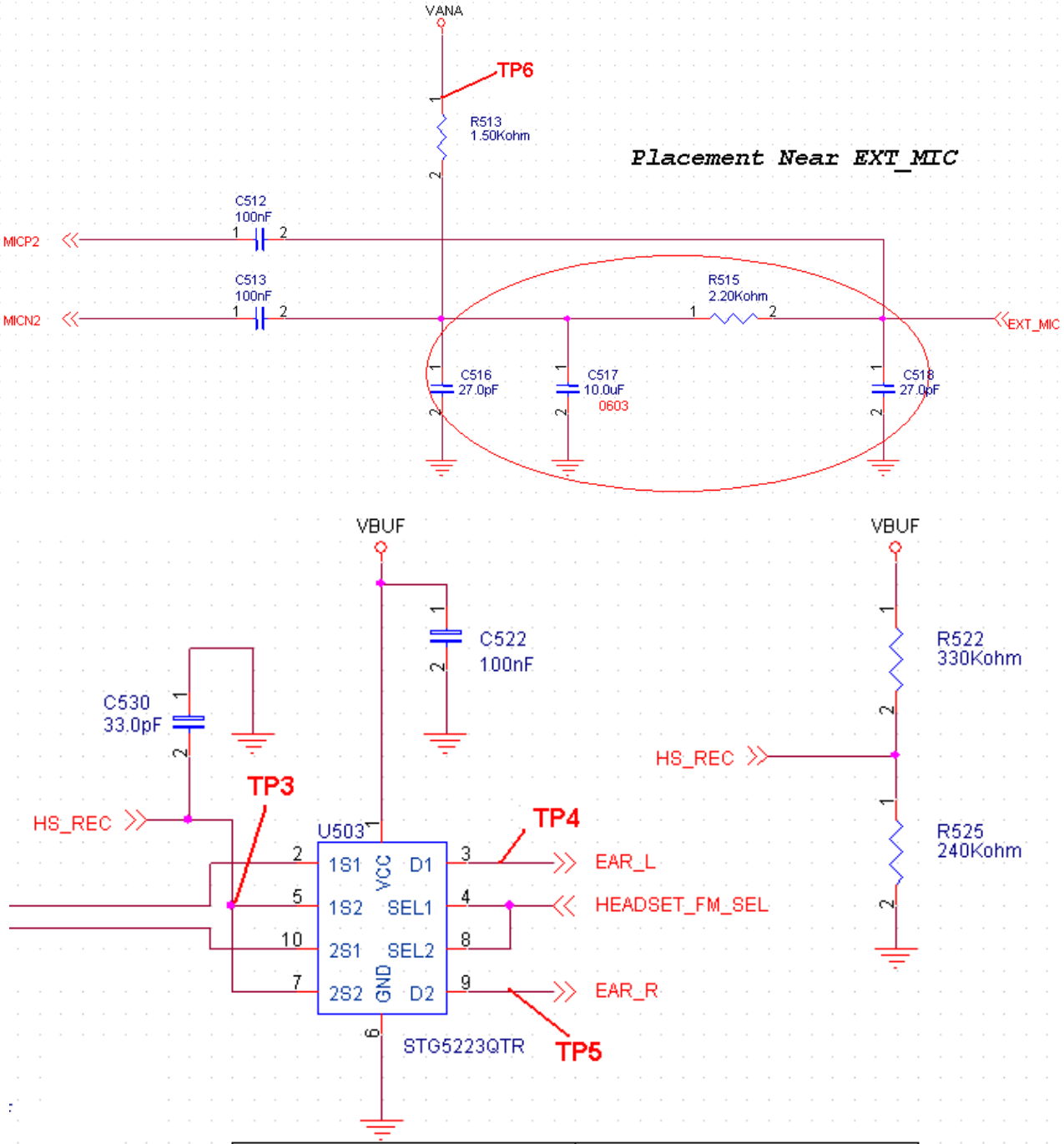

HEADSET_FM_SEL	Audio Channel
0	Earphone
1	FM

RESET VALUE:PULL DOWN

Checking Flow

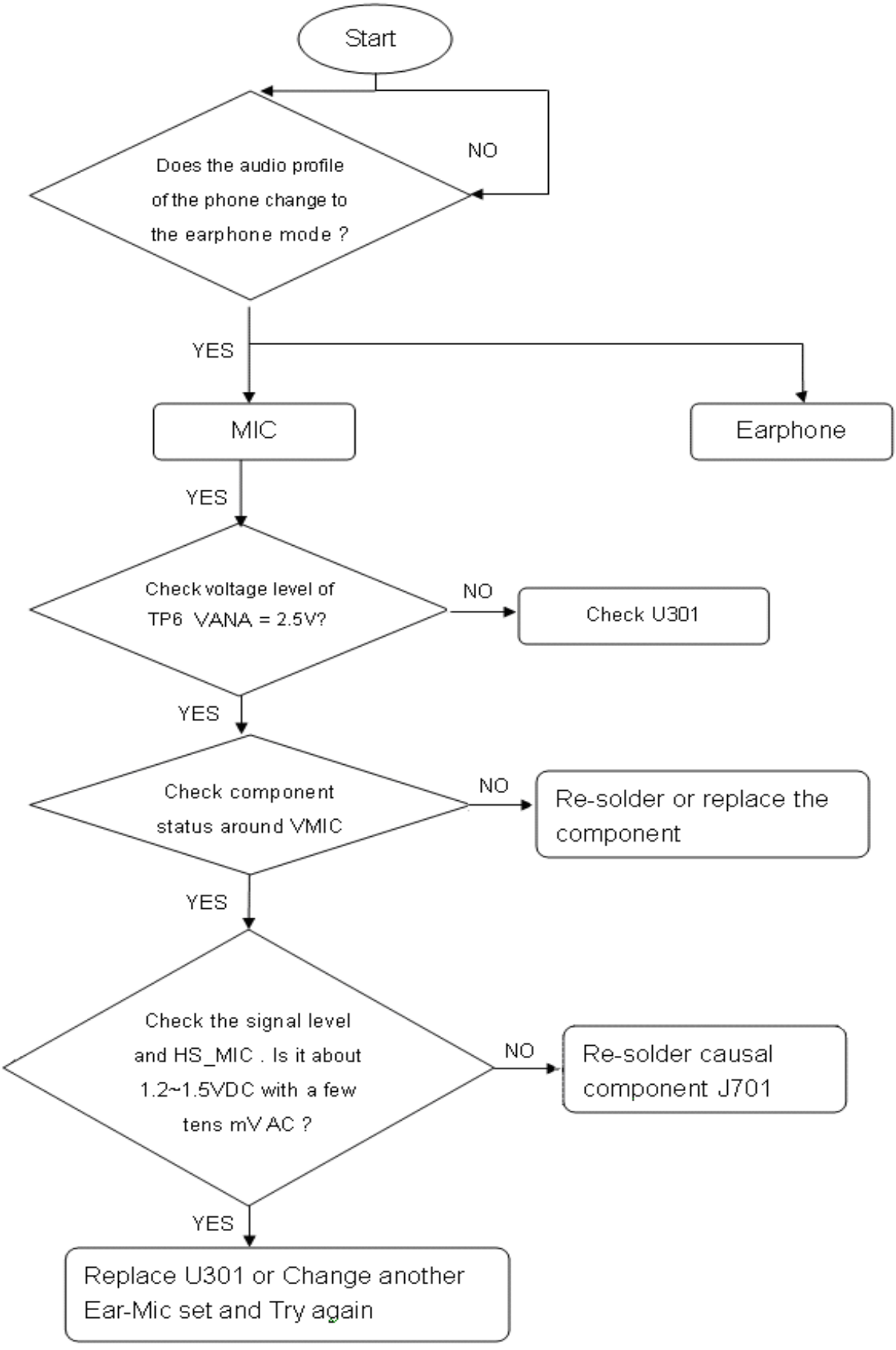

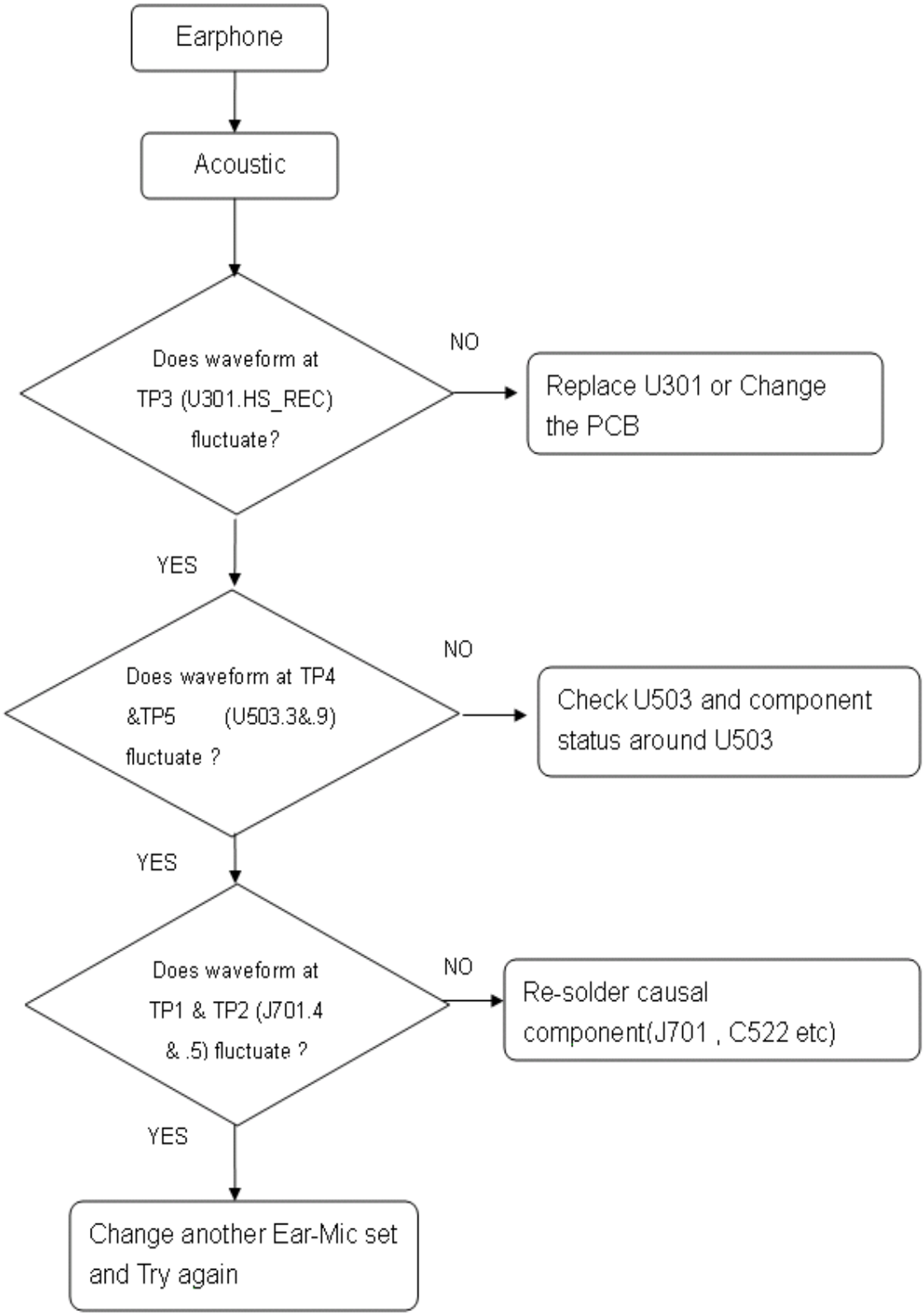
Earphone
Acoustic
Does waveform at TP3 (U301.HS_REC) fluctuate?
NO
Replace U301 or Change the PCB
YES
Does waveform at TP4 &TP5 (U503.3&.9) fluctuate ?
NO
Check U503 and component status around U503
YES
Does waveform at TP1 & TP2 (J701.4 & .5) fluctuate ?
NO
Re-solder causal component(J701 , C522 etc)
YES
Change another Ear-Mic set and Try again

4.13 Charging Trouble

Test Point

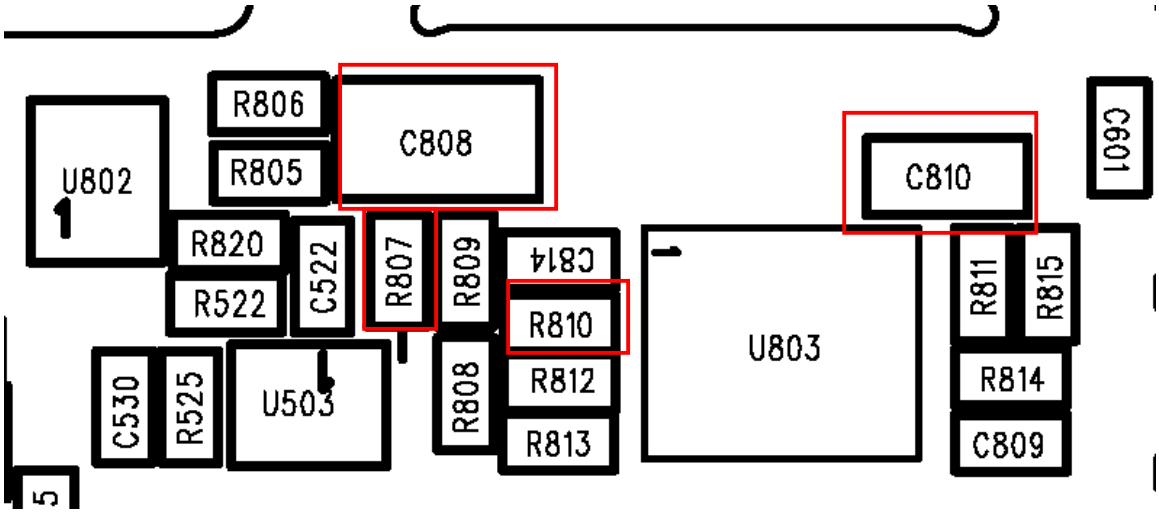

Circuit Diagram

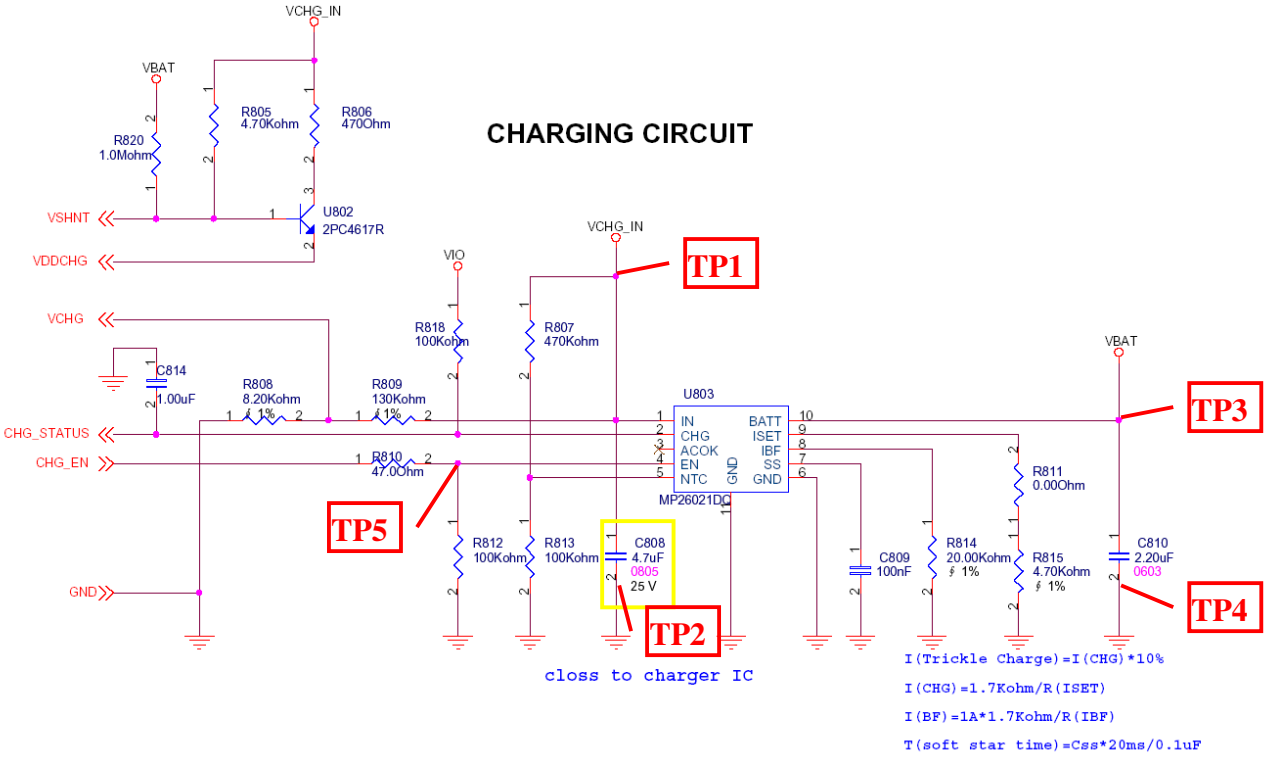

Checking Flow

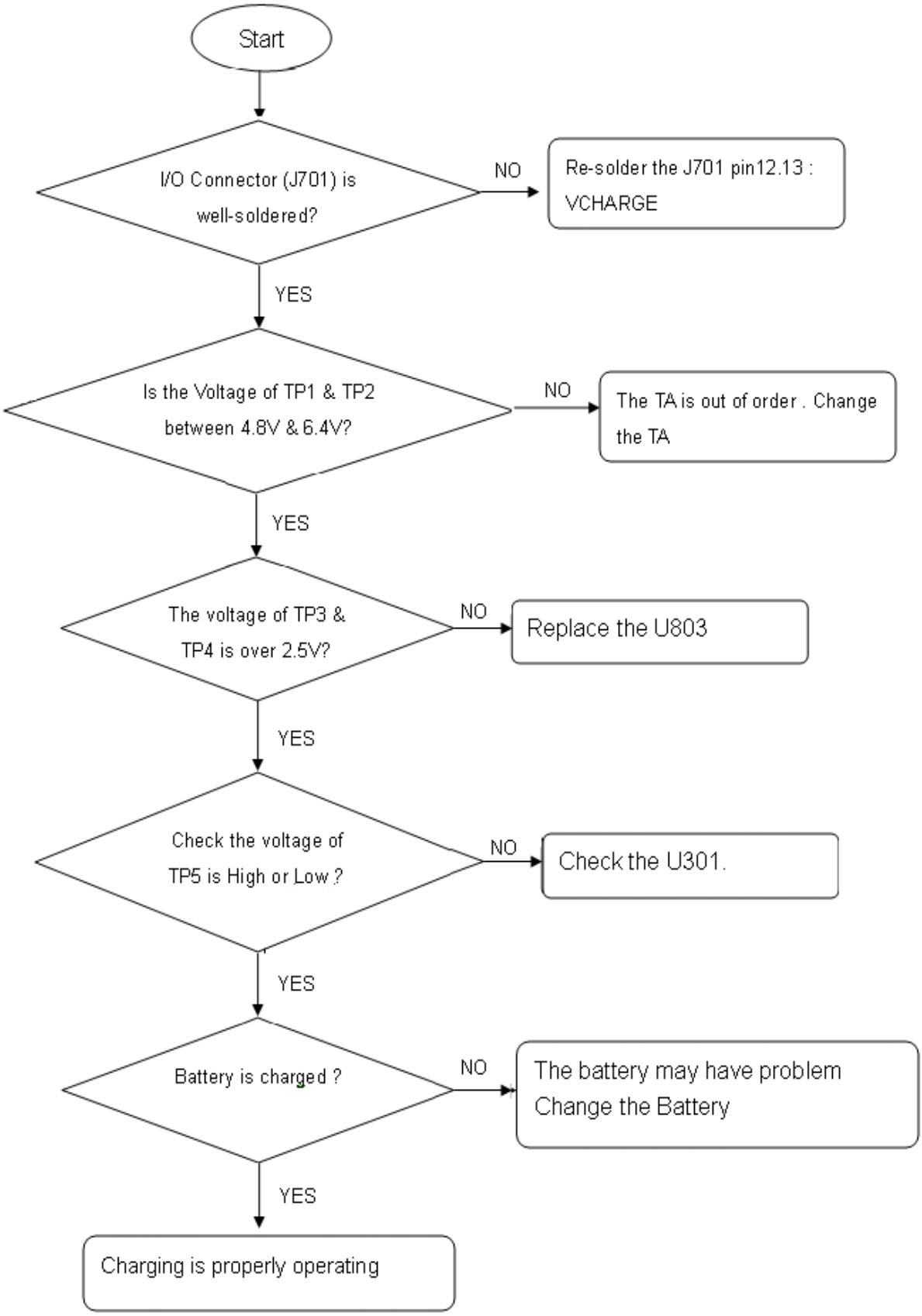

4.14 FM Radio Trouble

Test Point

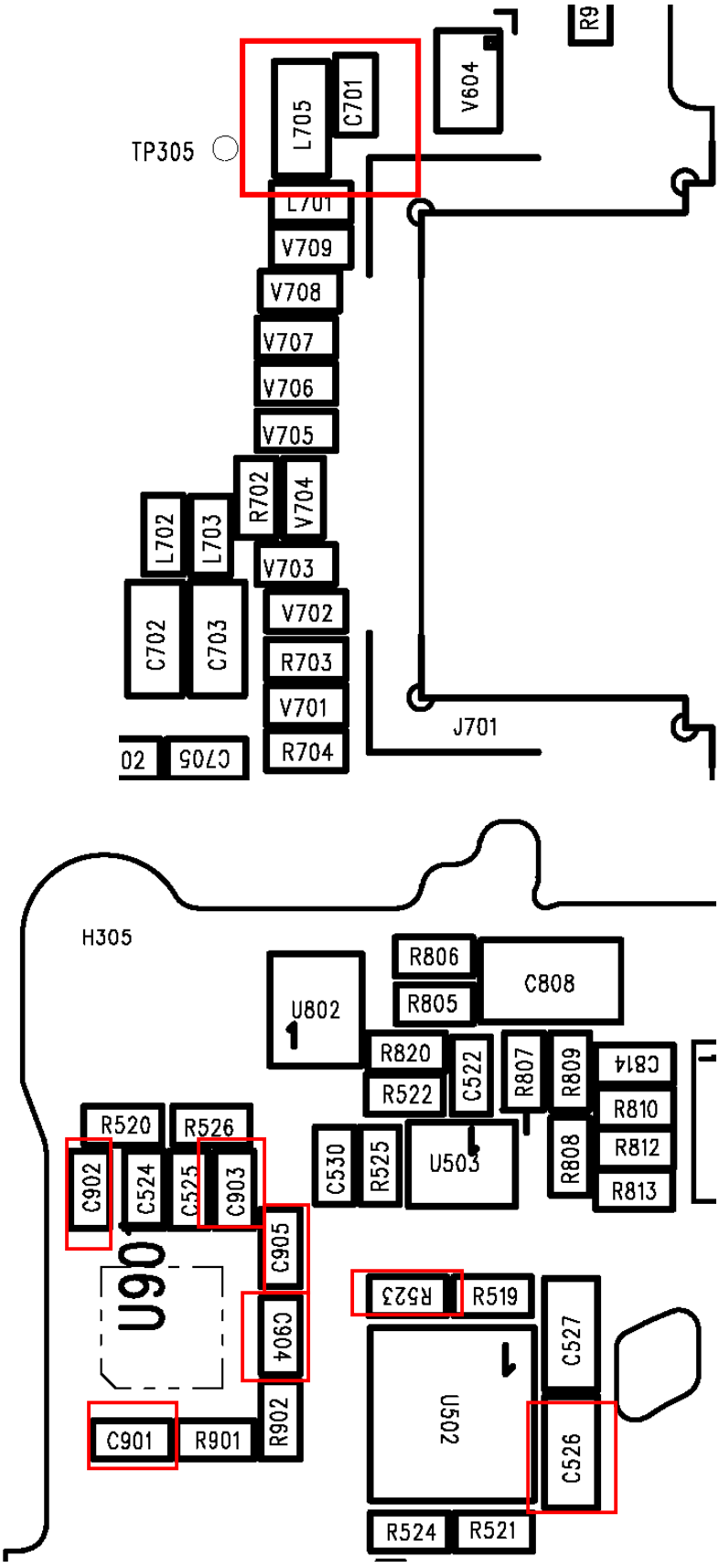

Circuit Diagram

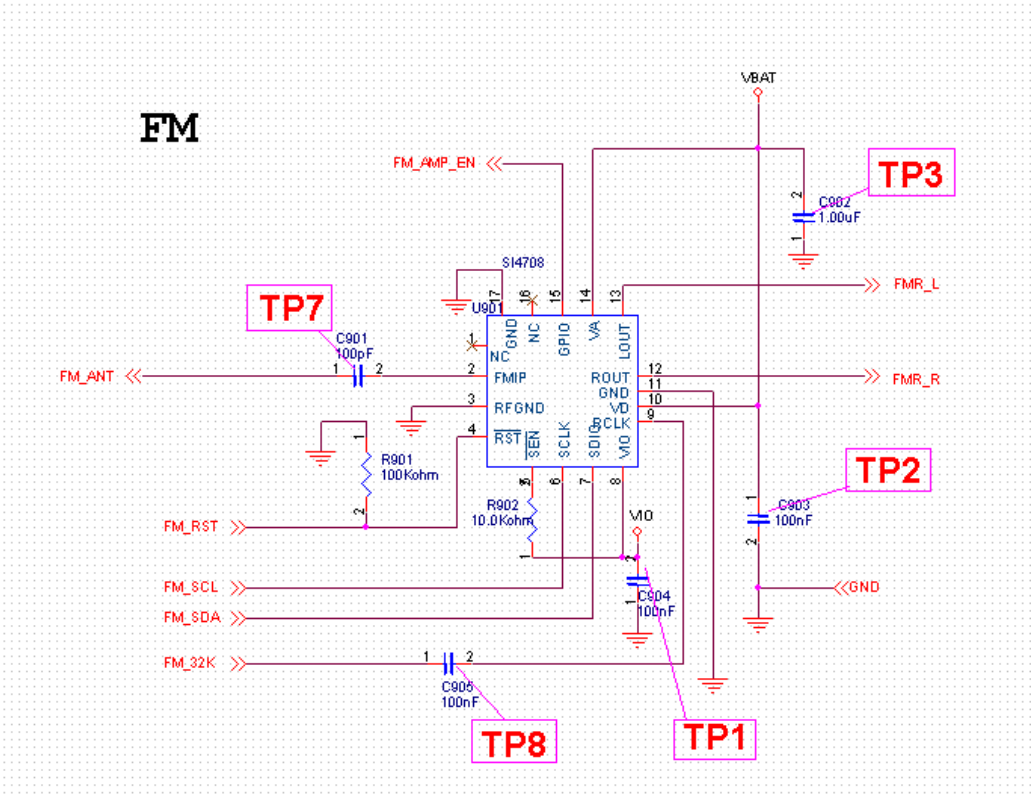

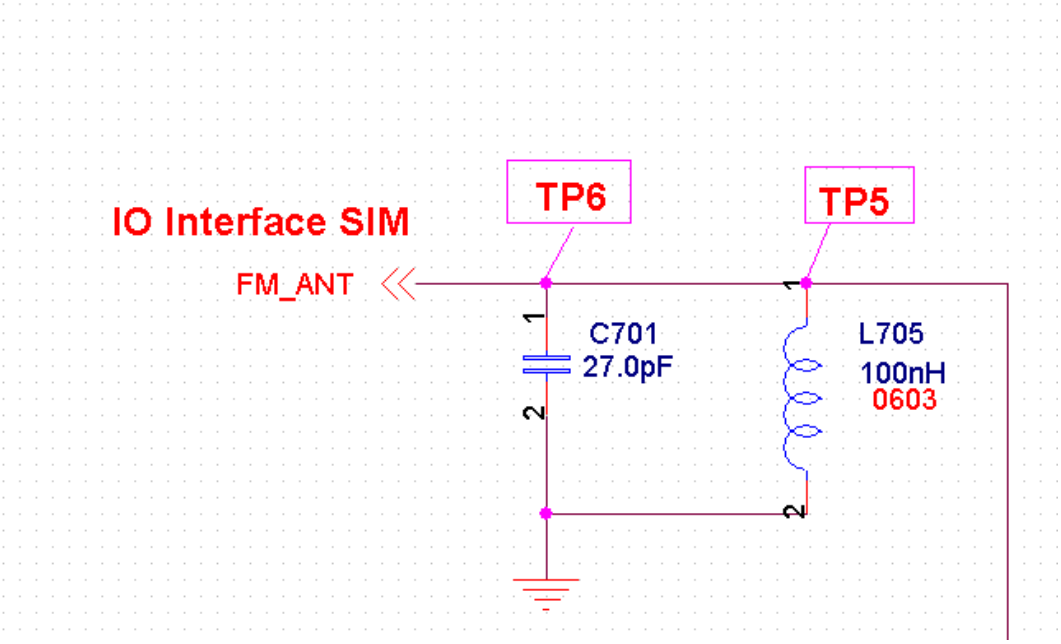

Checking Flow

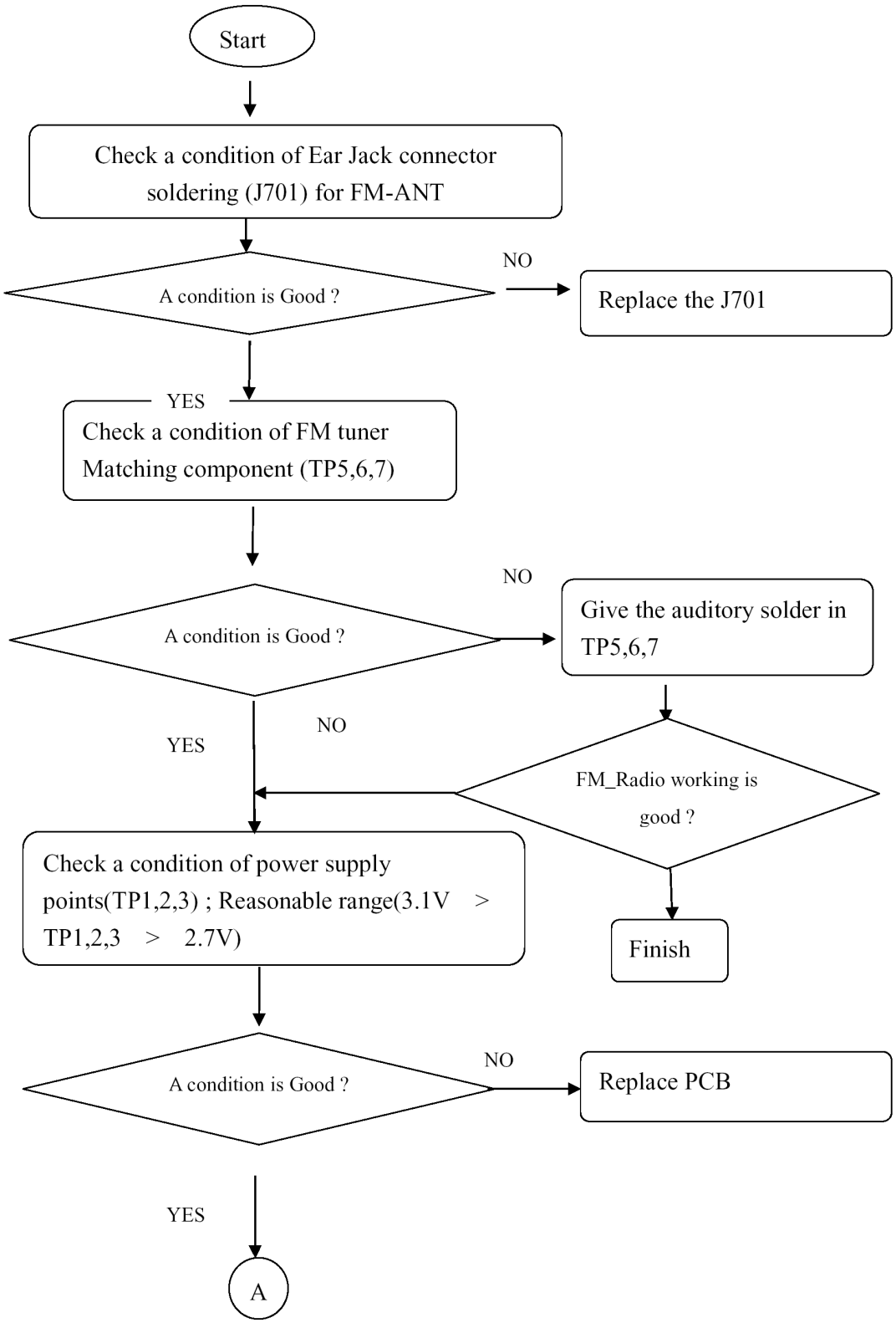

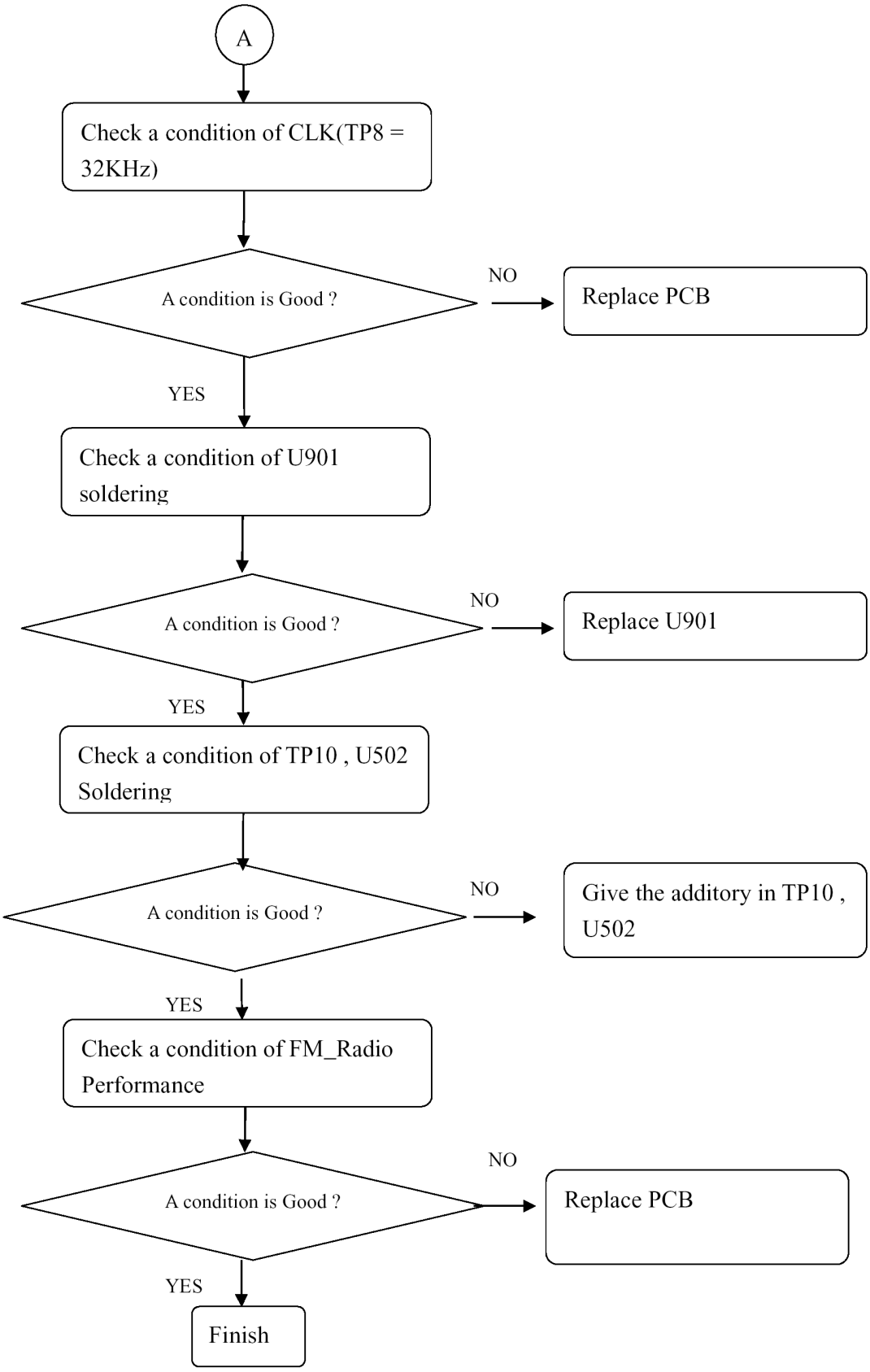
A
Check a condition of CLK(TP8 = 32KHz)
A condition is Good ?
NO
Replace PCB
YES
Check a condition of U901 soldering
A condition is Good ?
NO
Replace U901
YES
Check a condition of TP10 , U502 Soldering
A condition is Good ?
NO
Give the additory in TP10 , U502
YES
Check a condition of FM_Radio Performance
A condition is Good ?
NO
Replace PCB
YES
Finish

4.15 RF Trouble SHOOTING

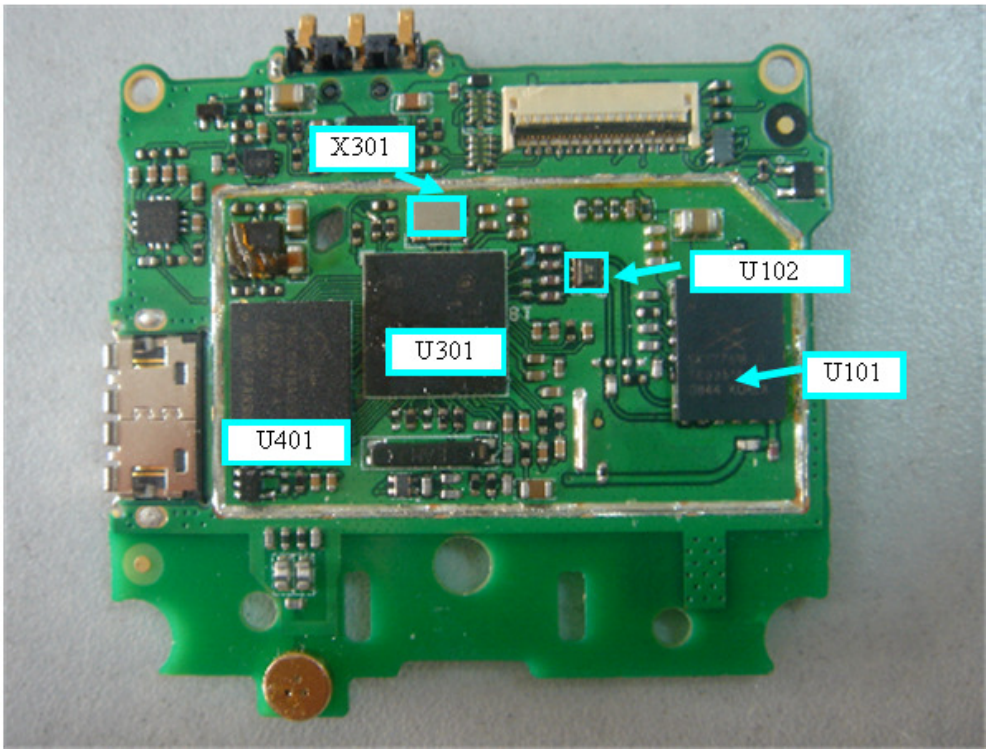

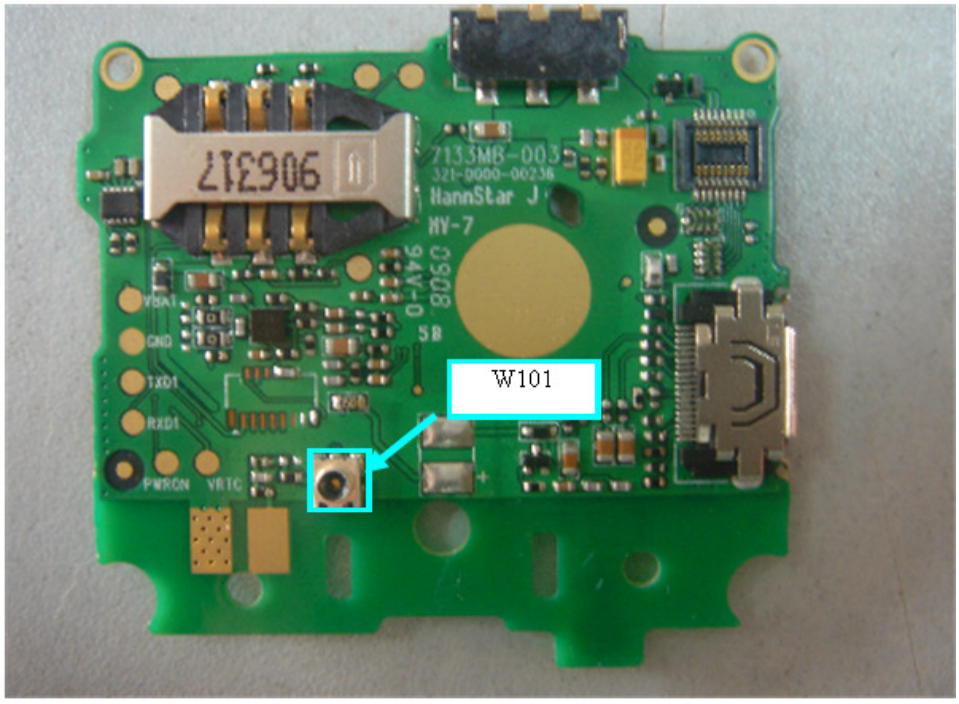

REFERENCE	PART Description
U101	PAM (Power Amp. Module+ASM)
X301	DCXO (26MHz)
W101	Mobile Switch
U102	RX SAW Filter

RF Trouble

TEST POINT

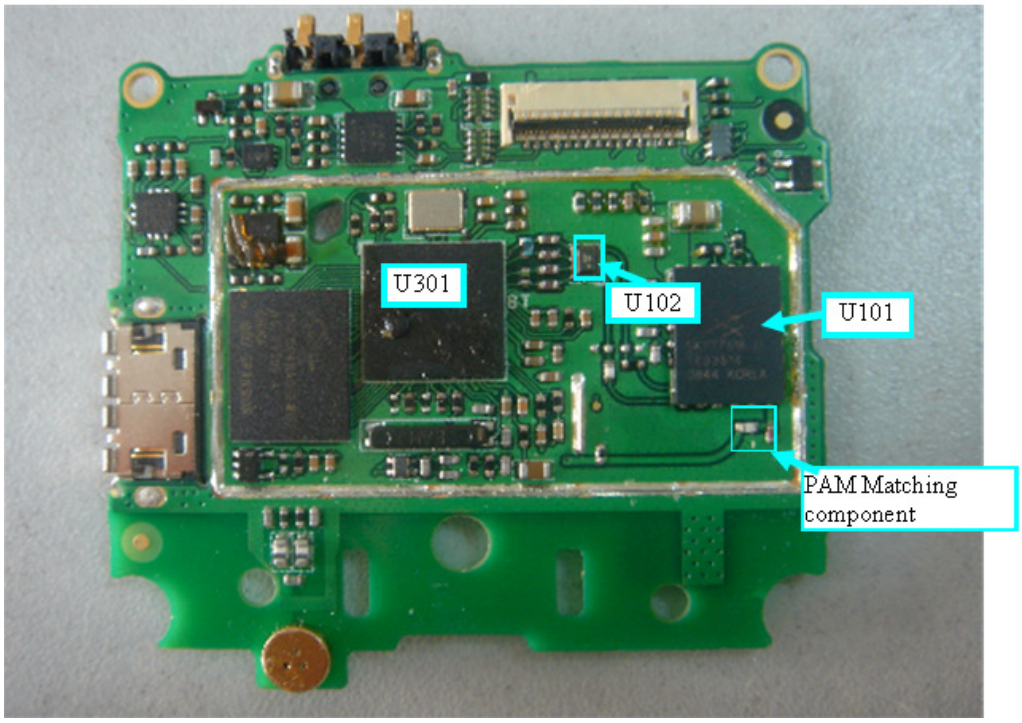

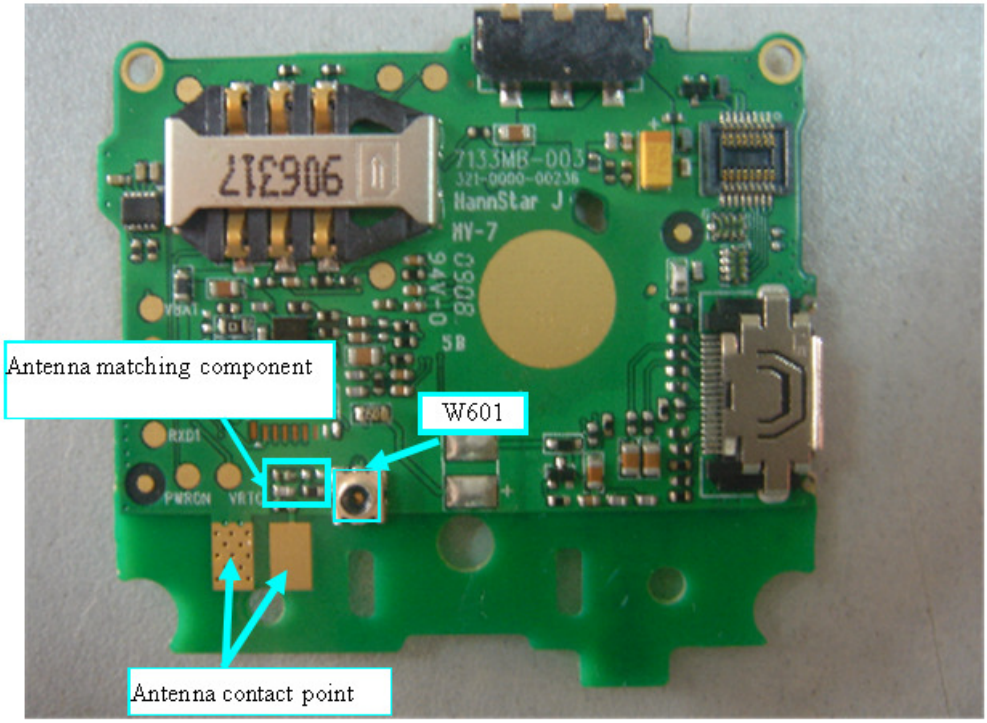

CIRCUIT

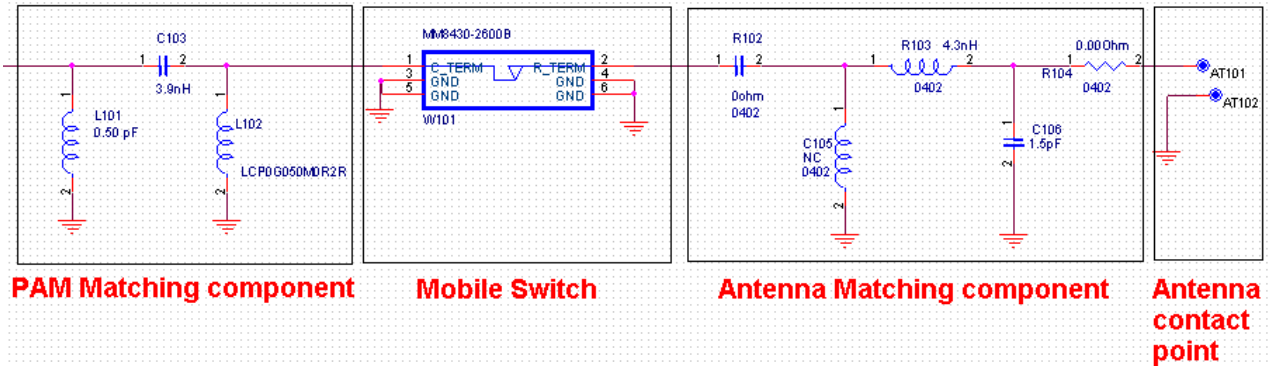

WAVE FORM

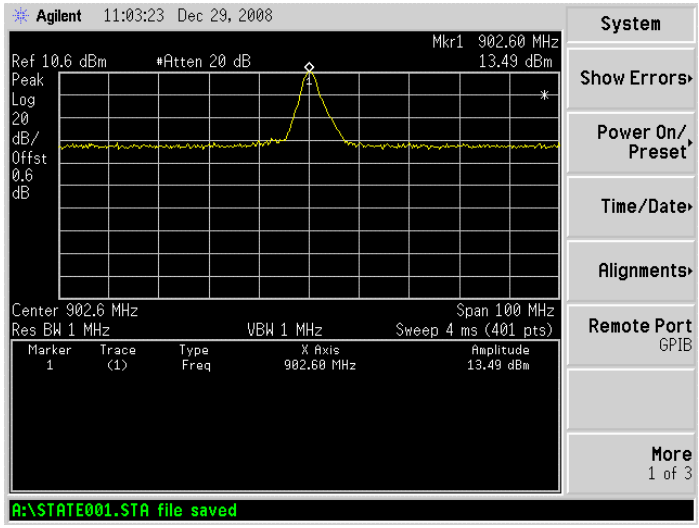

RF output power in AT101, AT102

CHECKING FLOW

Check RF output power form PA in U101. An analog signal pass through PAM Matching components, SW (W101), Antenna Matching components and Antenna contact point. Then finally pass it on to main Antenna.

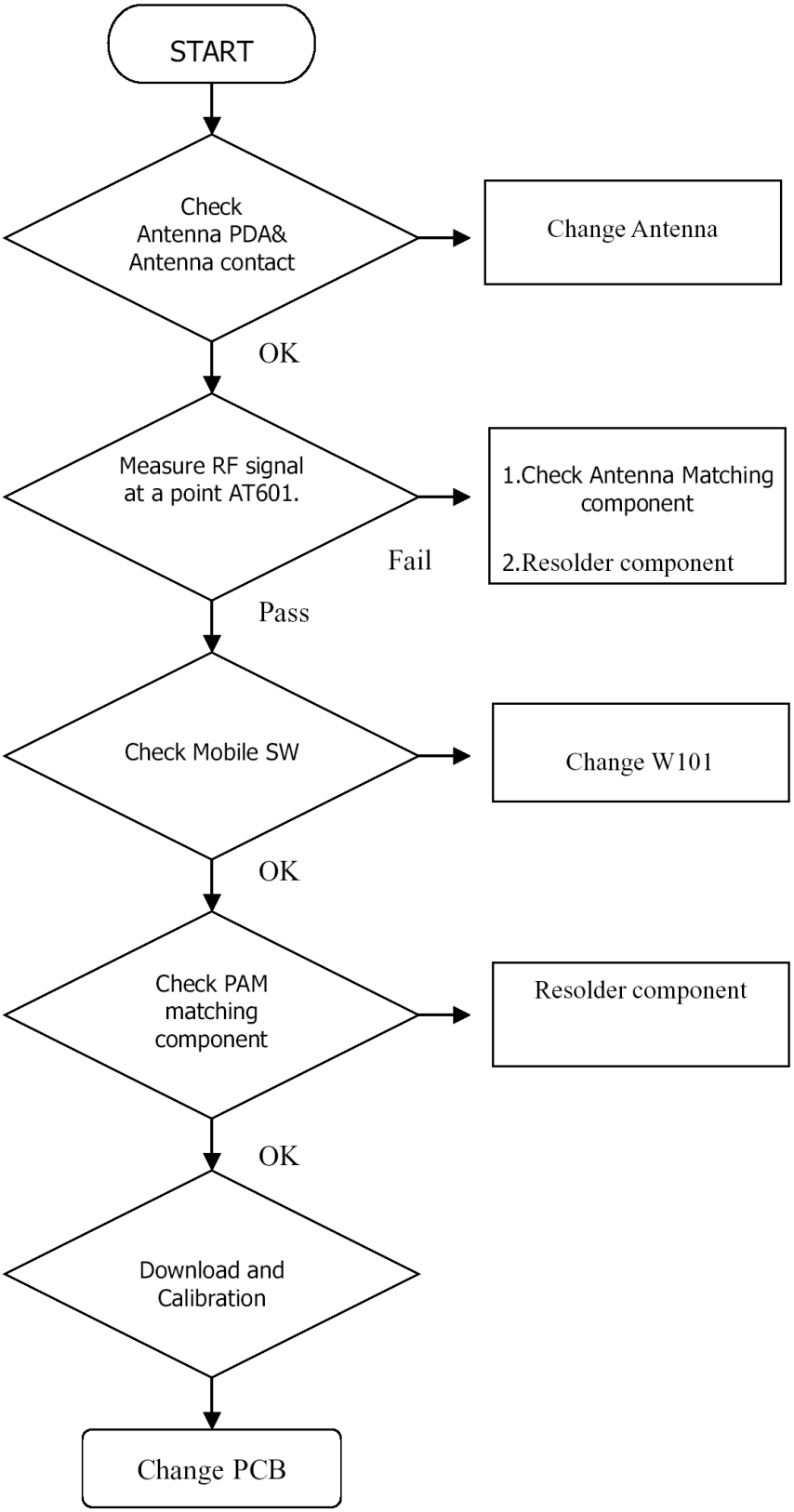
START
Check
Antenna PDA&
Antenna contact
Change Antenna
OK
Measure RF signal
at a point AT601.
1.Check Antenna Matching
component
2.Resolder component
Fail
Pass
Check Mobile SW
Change W101
OK
Check PAM
matching
component
Resolder component
OK
Download and
Calibration
Change PCB

RX Trouble

TEST POINT

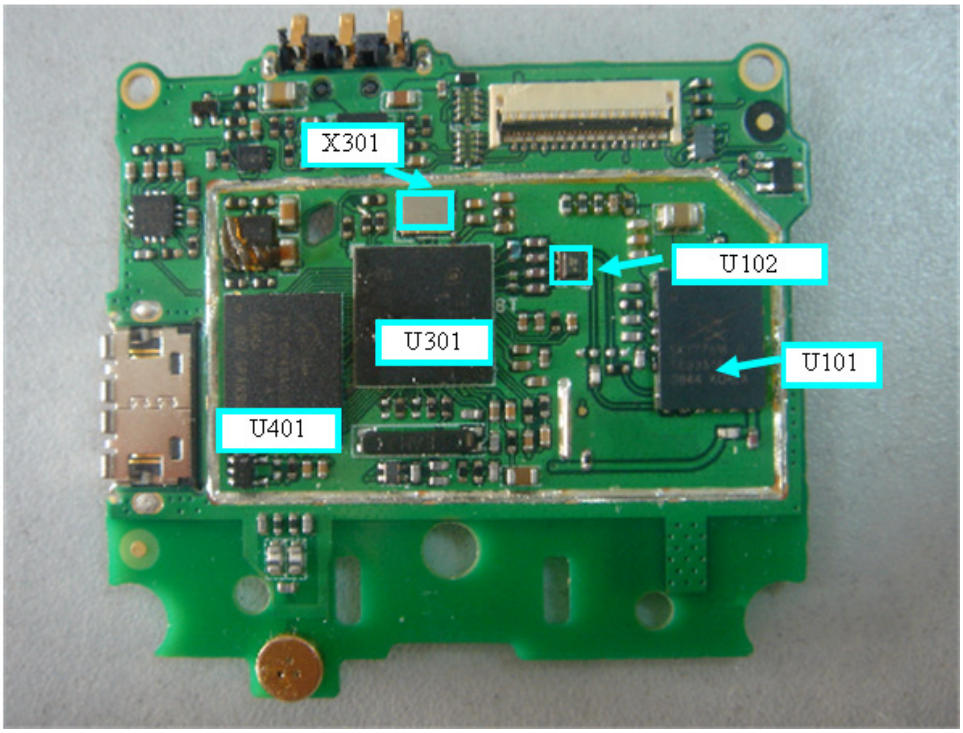

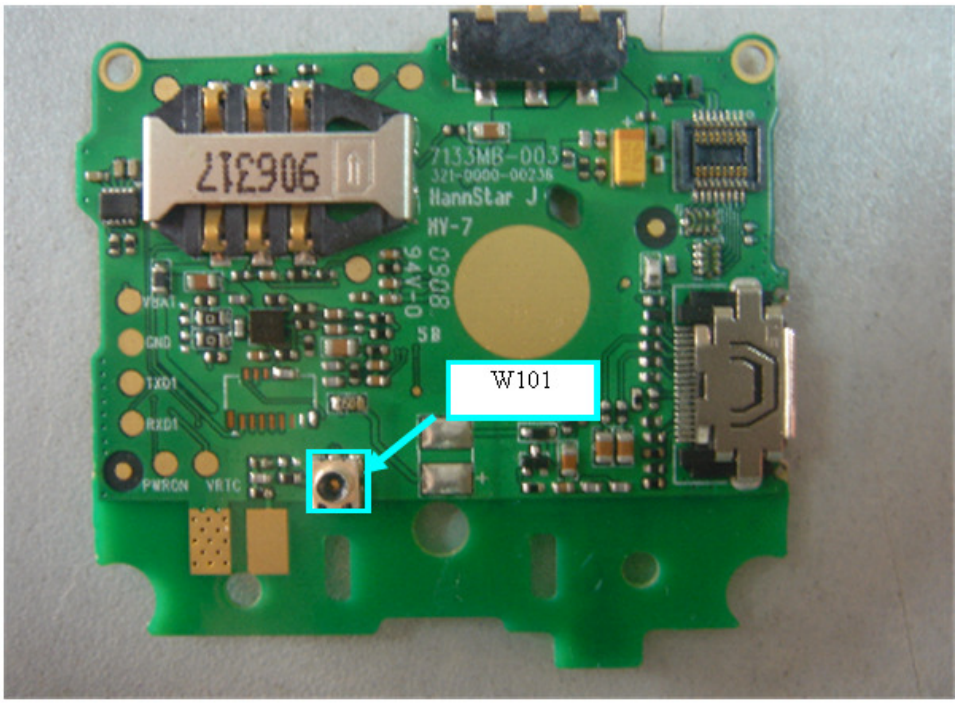

CIRCUIT

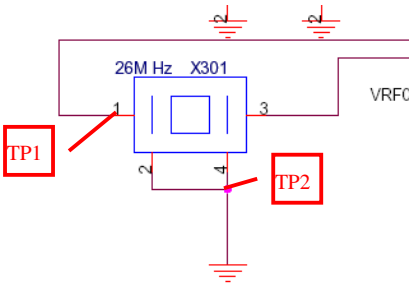

MODE	T_OUT2 (VLOGIC)	INPUT CONTROL BITS	
		TX EN	BS
STANDBY	0	X	X
GSM_RX	1	0	0
DCS_RX	1	0	1
GSM_TX	1	1	0
DCS_TX	1	1	1

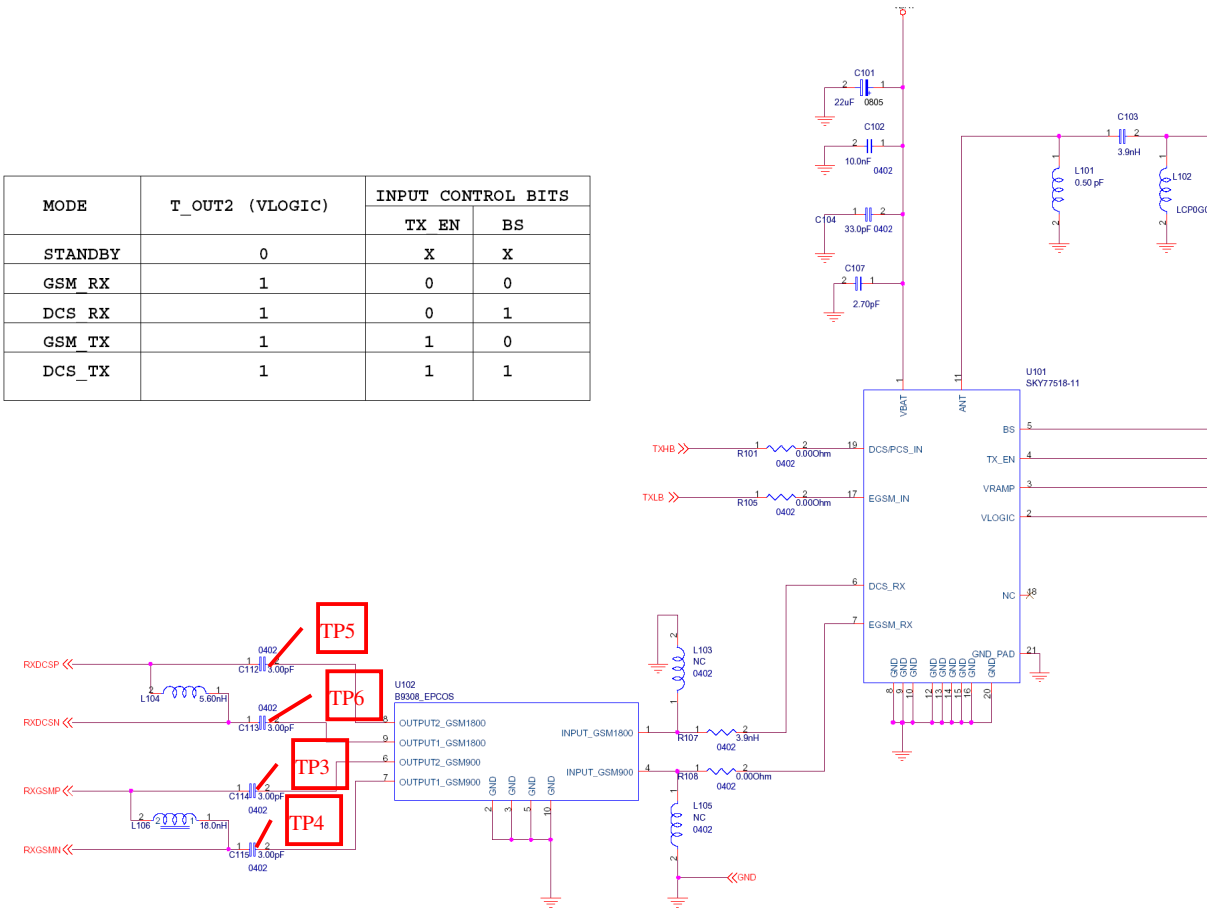

CHECKING FLOW

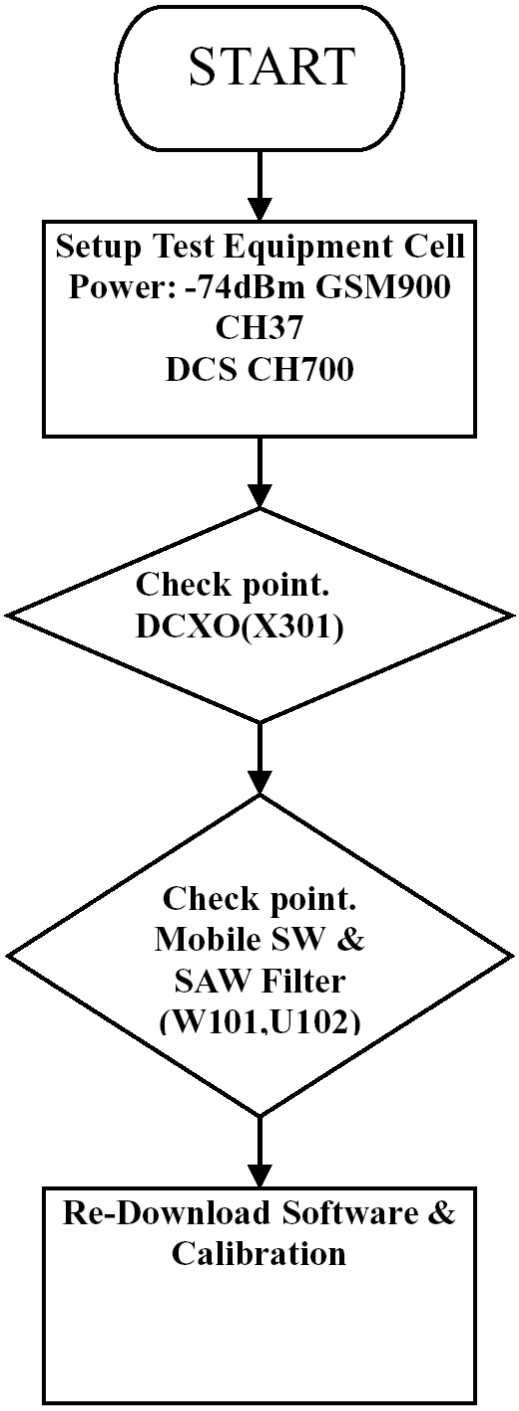

TEST POINT

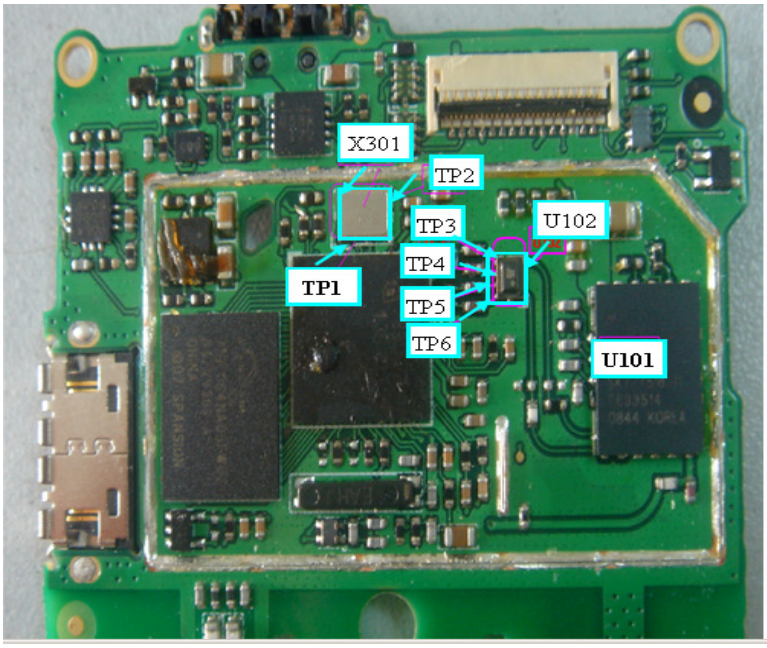

CIRCUIT

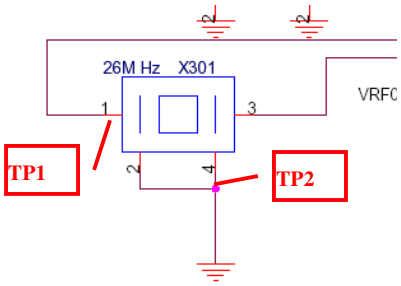

MODE	T_OUT2 (VLOGIC)	INPUT CONTROL BITS	
		TX_EN	BS
STANDBY	0	X	X
GSM_RX	1	0	0
DCS_RX	1	0	1
GSM_TX	1	1	0
DCS_TX	1	1	1

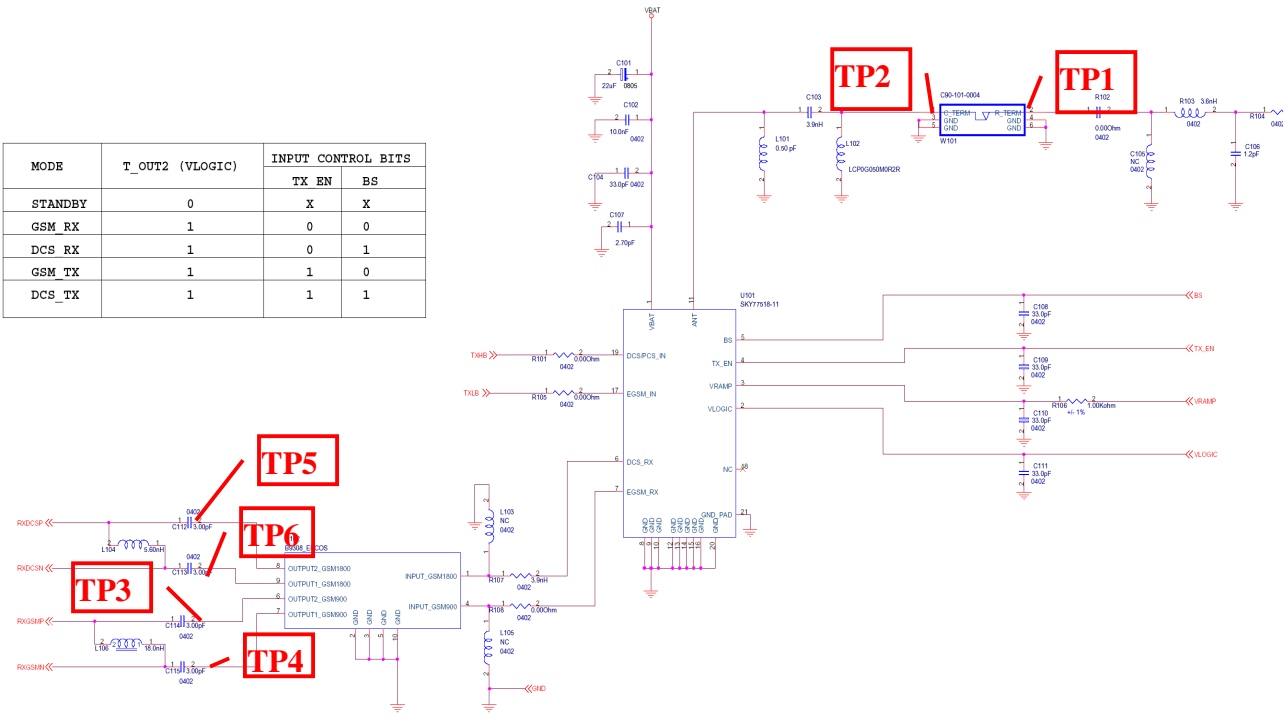

WAVE FORM

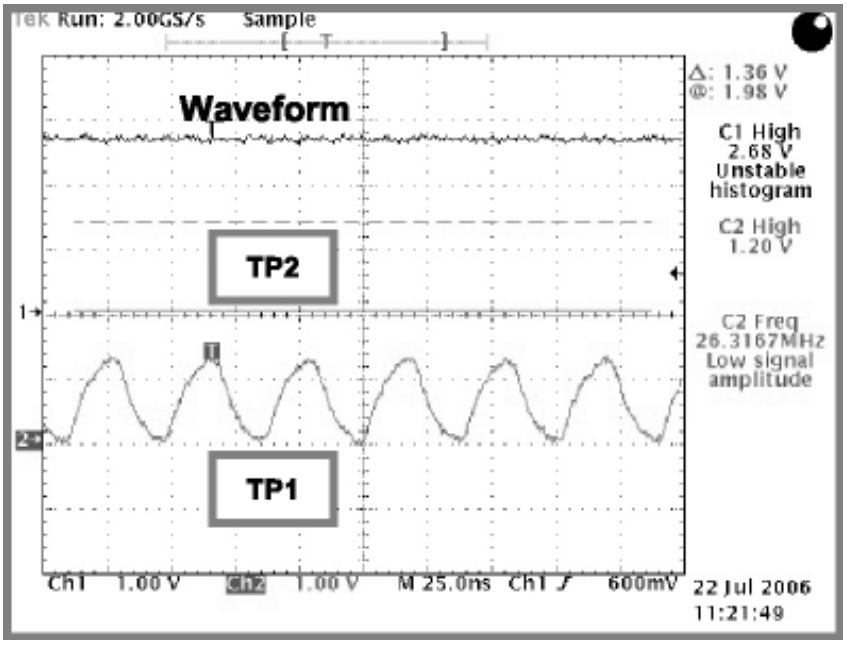

CHECKING FLOW

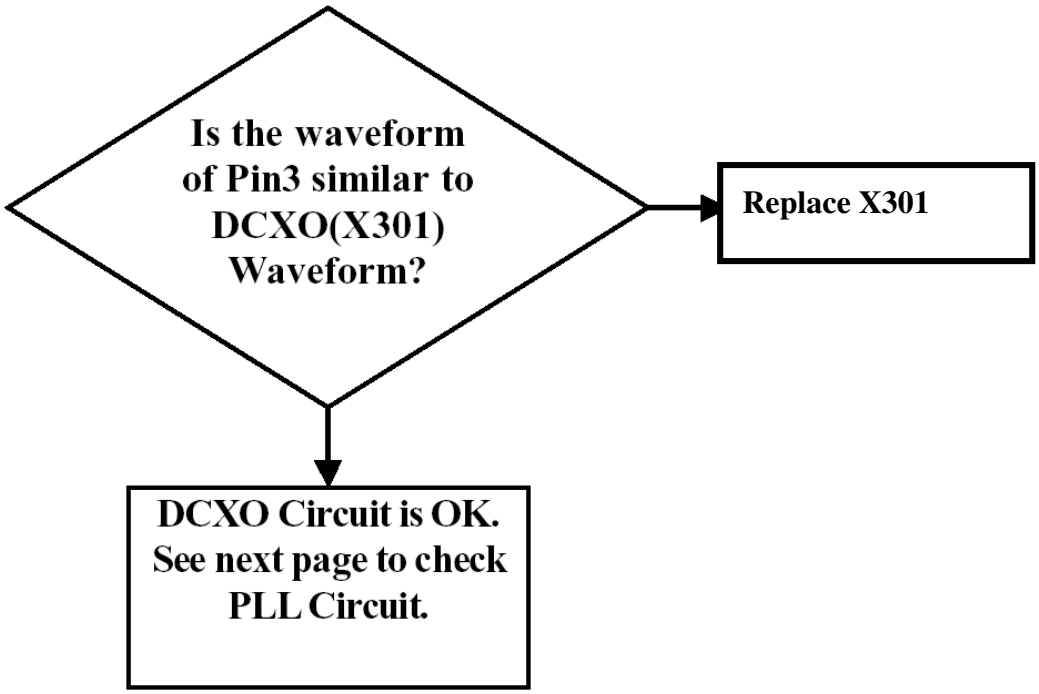

TX Trouble

TEST POINT

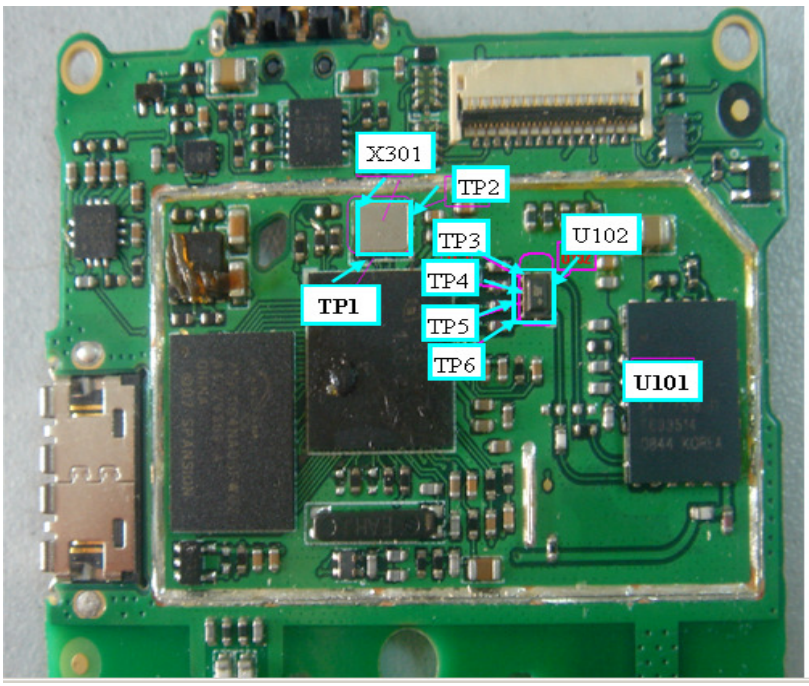

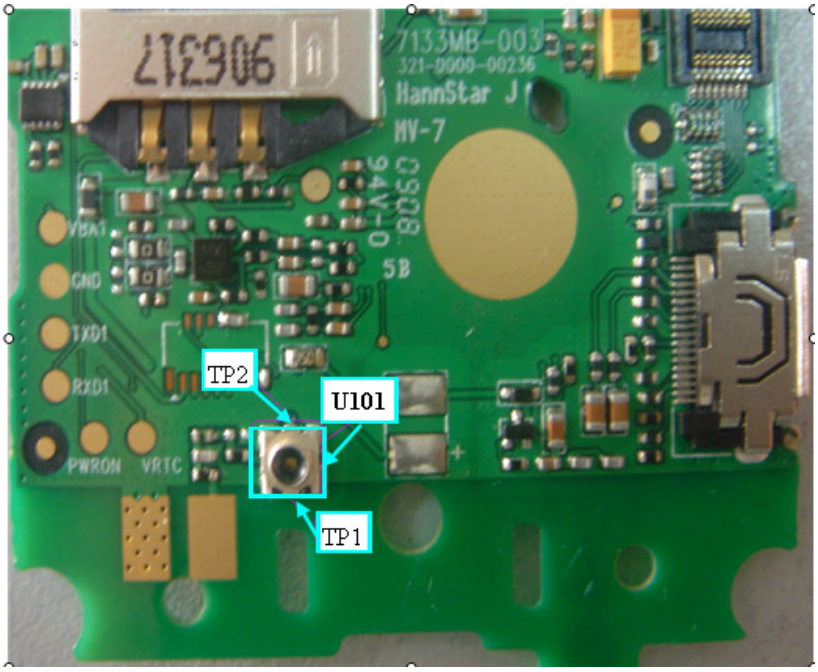

CIRCUIT

MODE	T_OUT2 (VLOGIC)	INPUT CONTROL BITS	
		TX EN	BS
STANDBY	0	X	X
GSM_RX	1	0	0
DCS_RX	1	0	1
GSM_TX	1	1	0
DCS_TX	1	1	1

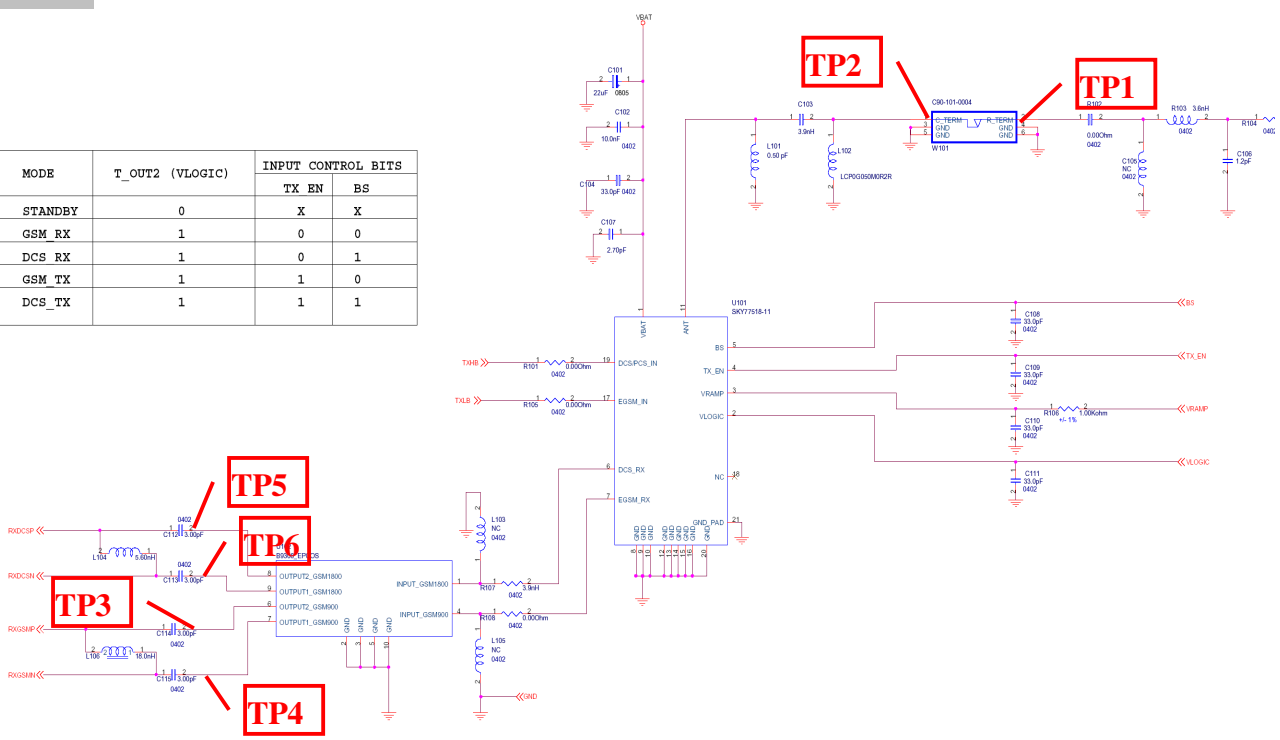

WAVE FORM

TEST POINT

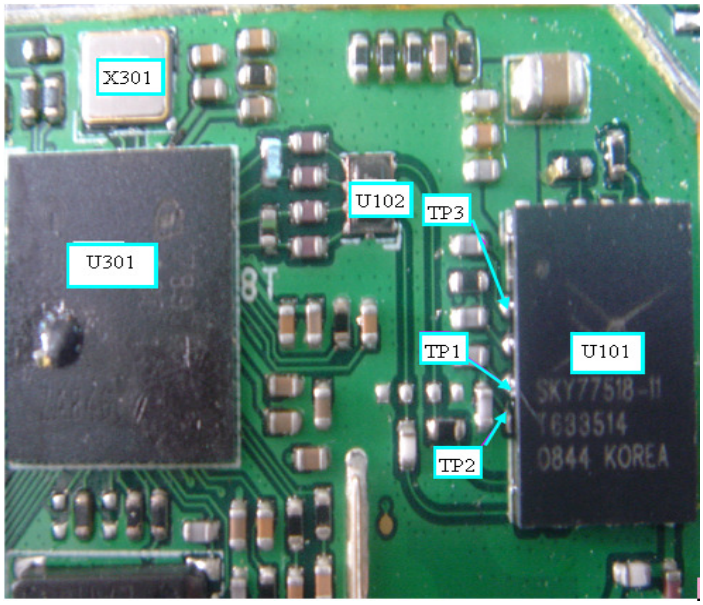
X301
U102
TP3
U301
TP1
U101
TP2

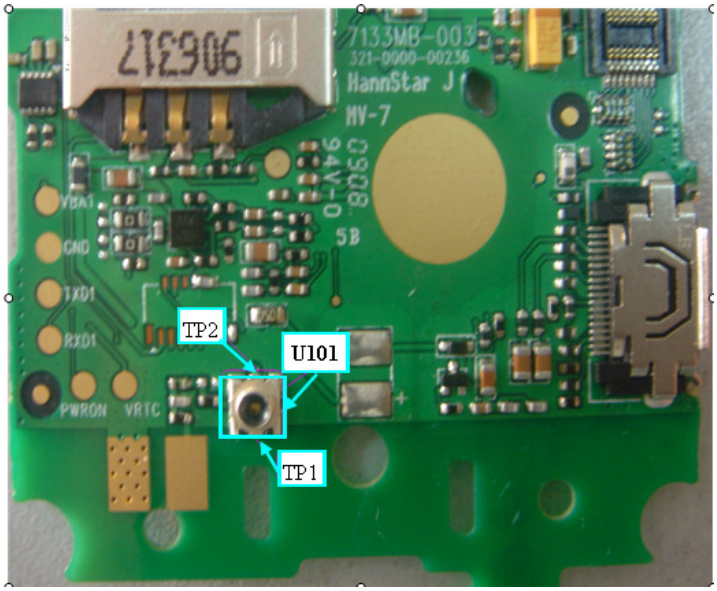
7133MB-003
321-0000-00236
HannStar J
MV-7
TP2
U101
TP1

CHECKING FLOW

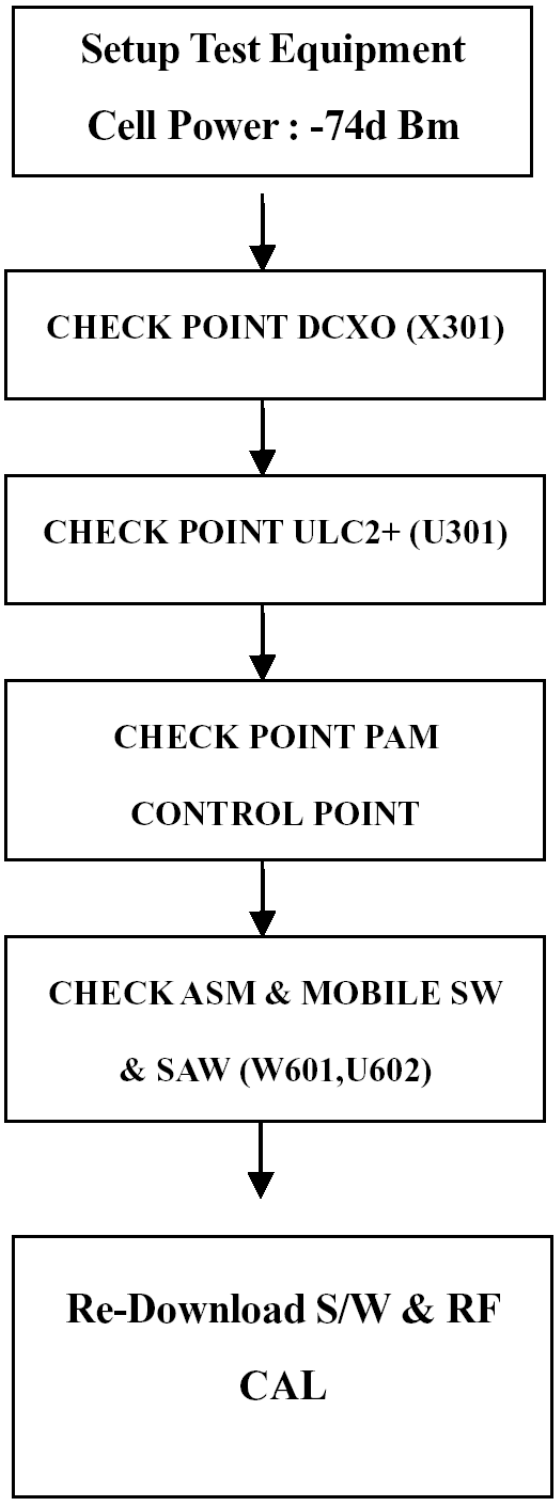

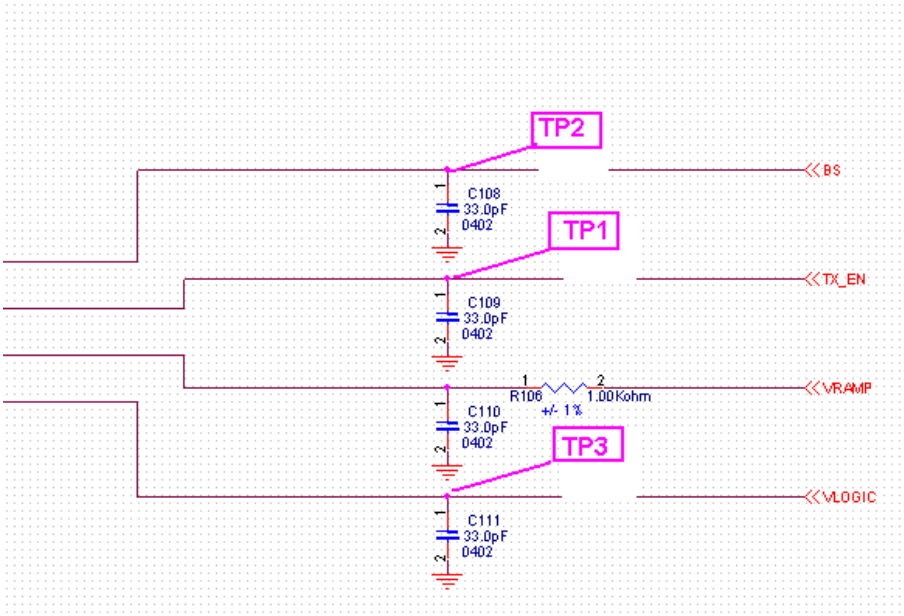

Signal configuration

Mode	GSM900 TX	DCS1800 TX
TXON_PA (TP1)	H(2.7V)	H(2.7V)
BS (TP2)	L	H(2.7V)
VLOGIC (TP3)	H(2.7V)	H(2.7V)

CHECKING FLOW

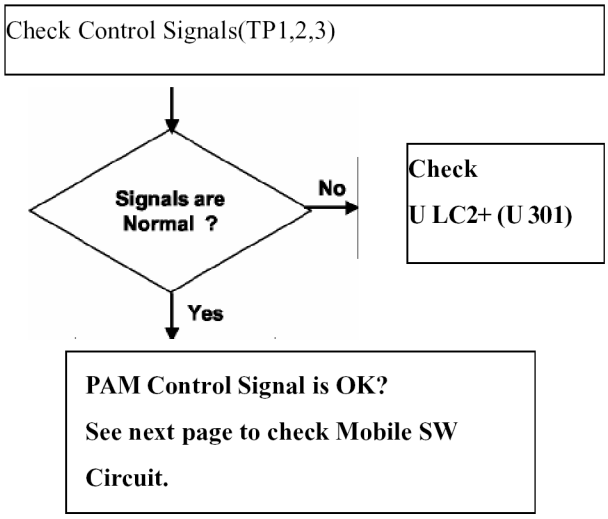

TROUBLE SHOOTING

TEST POINT

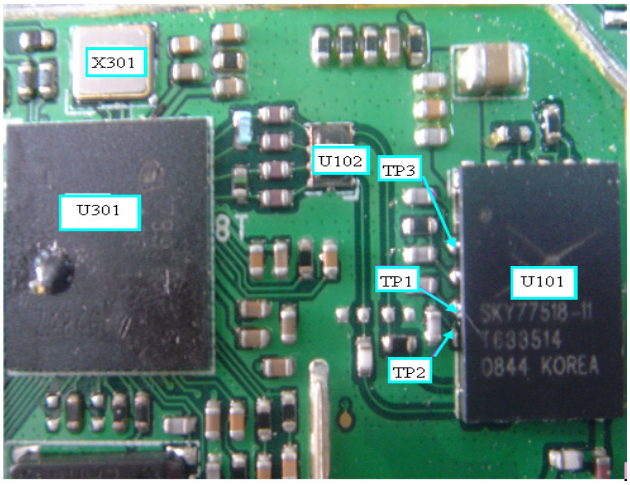

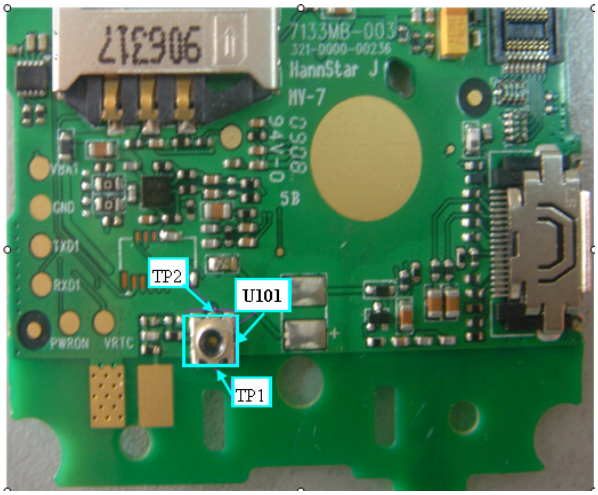

CIRCUIT

MODE	T_OUT2 (VLOGIC)	INPUT CONTROL BITS	
		TX_EN	BS
STANDBY	0	X	X
GSM_RX	1	0	0
DCS_RX	1	0	1
GSM_TX	1	1	0
DCS_TX	1	1	1

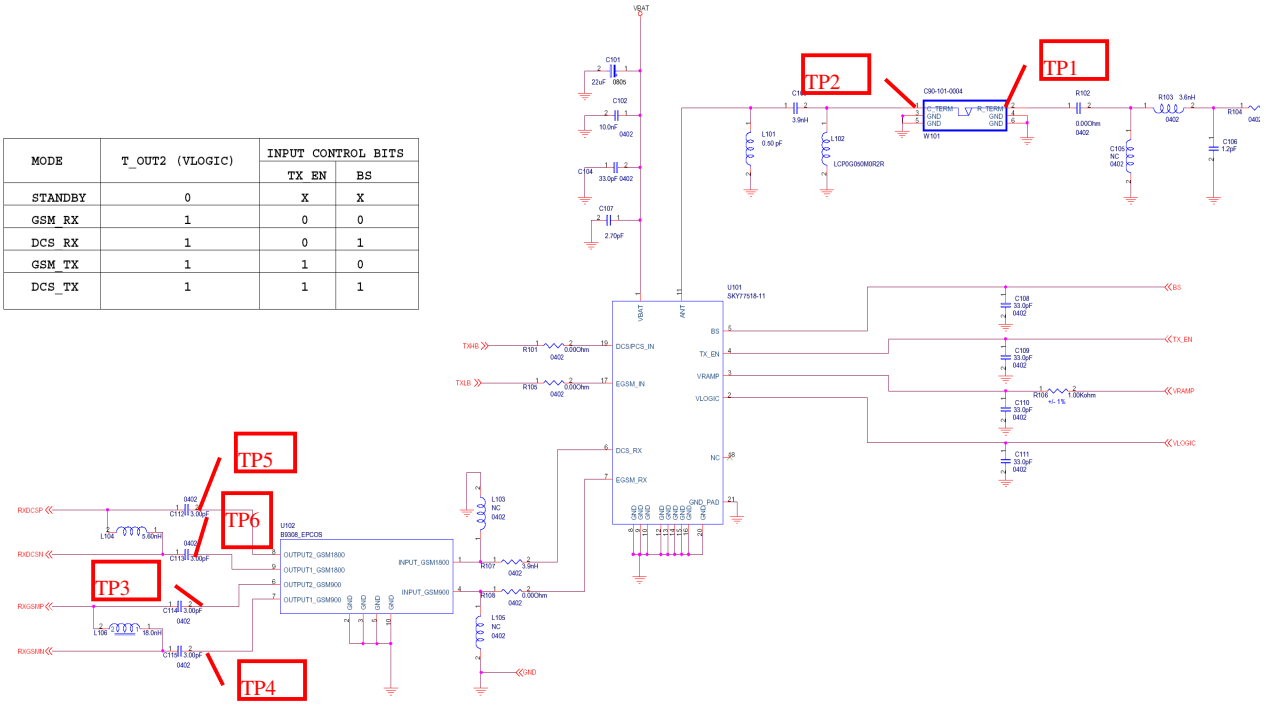

WAVE FORM

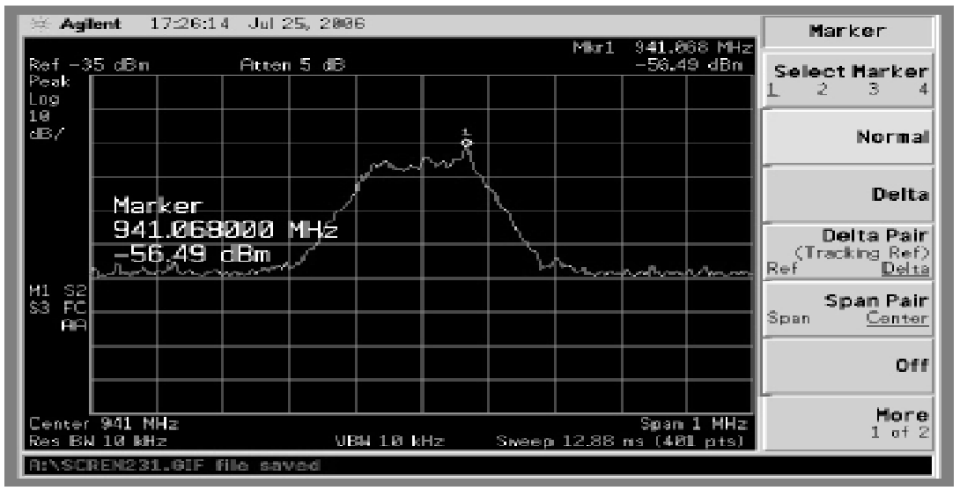

Mode	GSM900 RX	PCS1800 RX
VLOGIC (TP3)	H(2.7V)	H(2.7V)
TXON_PA (TP4)	L	L
BS(TP5)	L	H(2.7V)

CHECKING FLOW

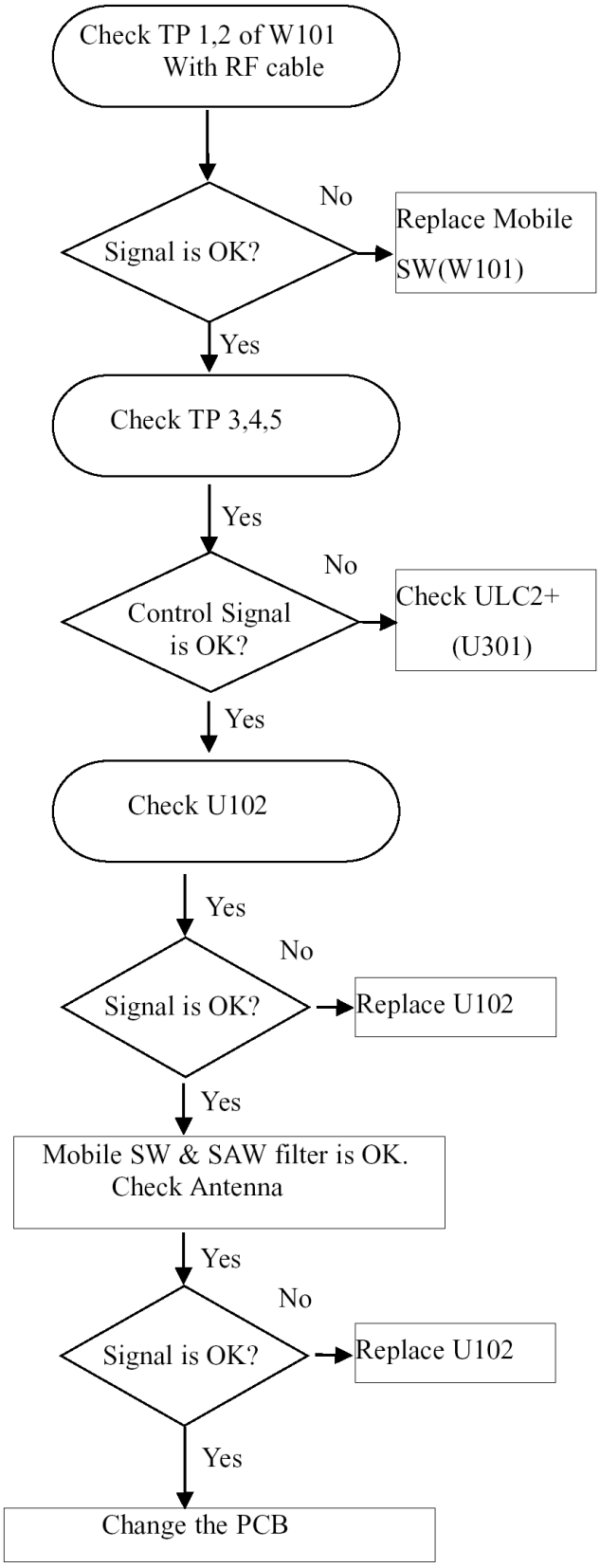

5.DOWNLOAD

5.1 Download Setup

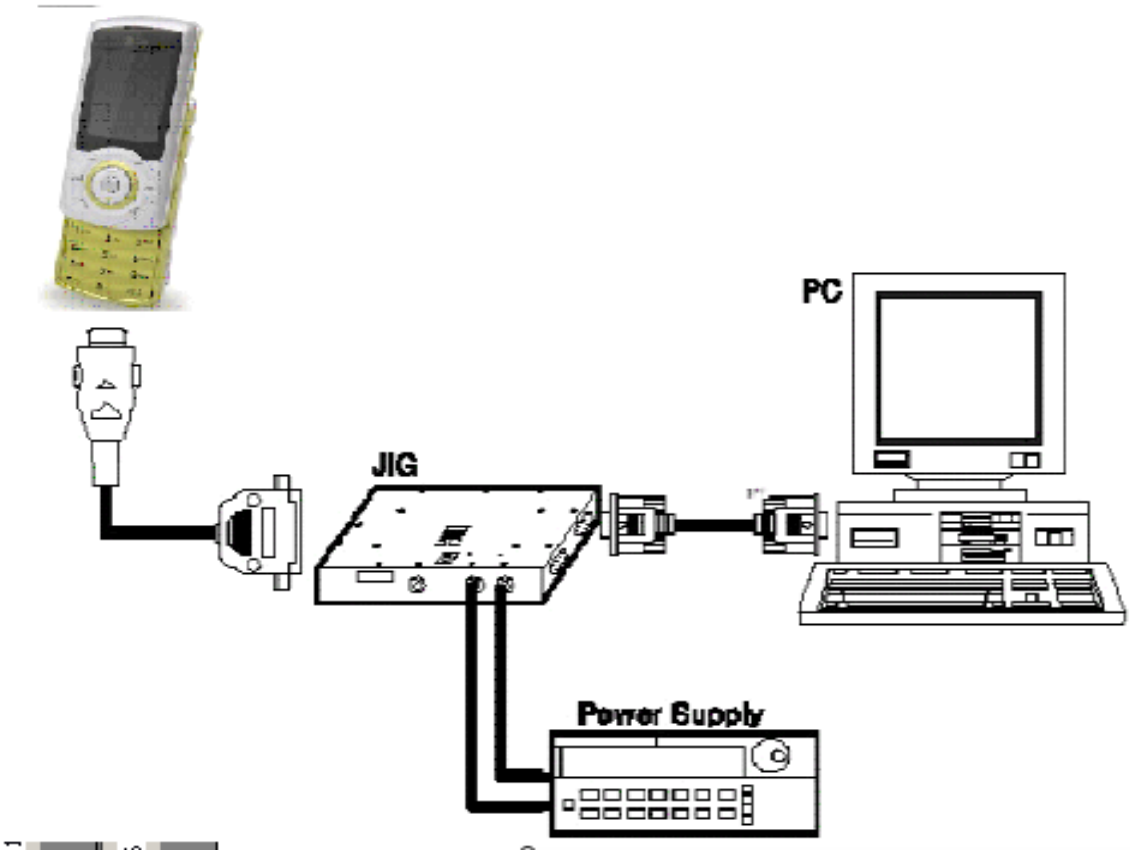

5.2 Download tool

1. Installation.

Installing this program before you must install “Prolific USB-to-Serial Comm Port” driver first. Install SetupDWForService.msi when driver installing is Okay.

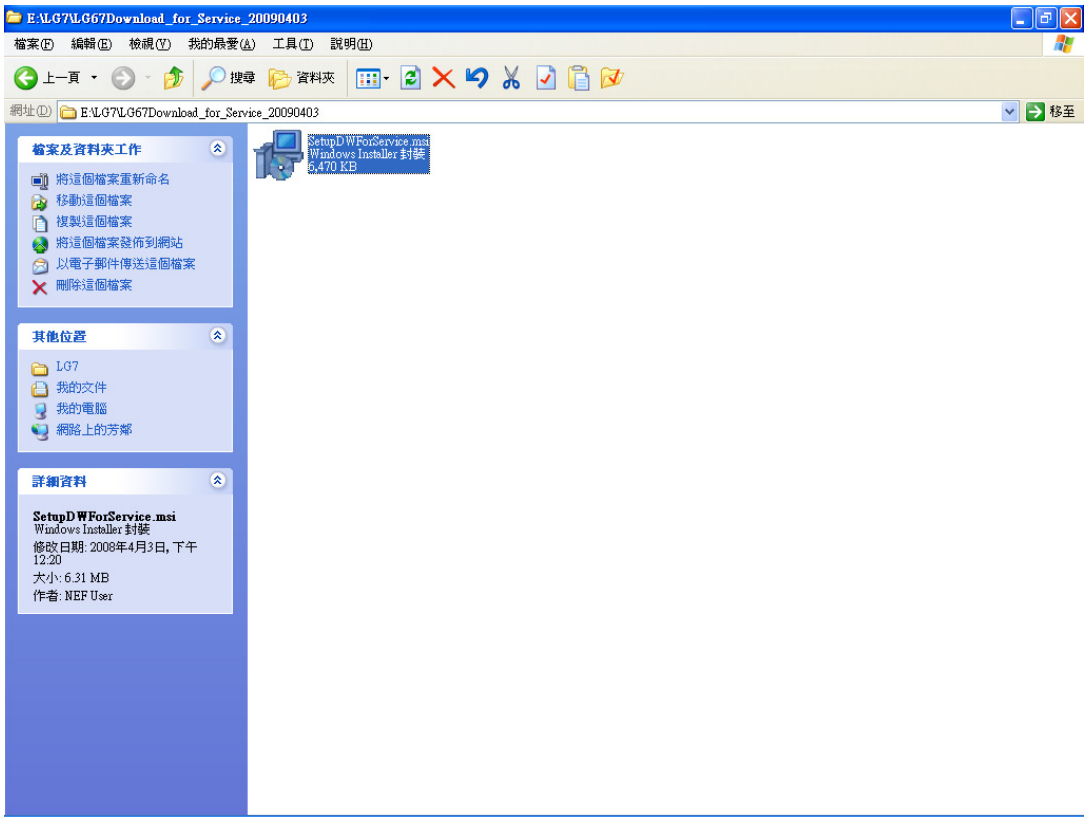

Click “Next” button to continue.。

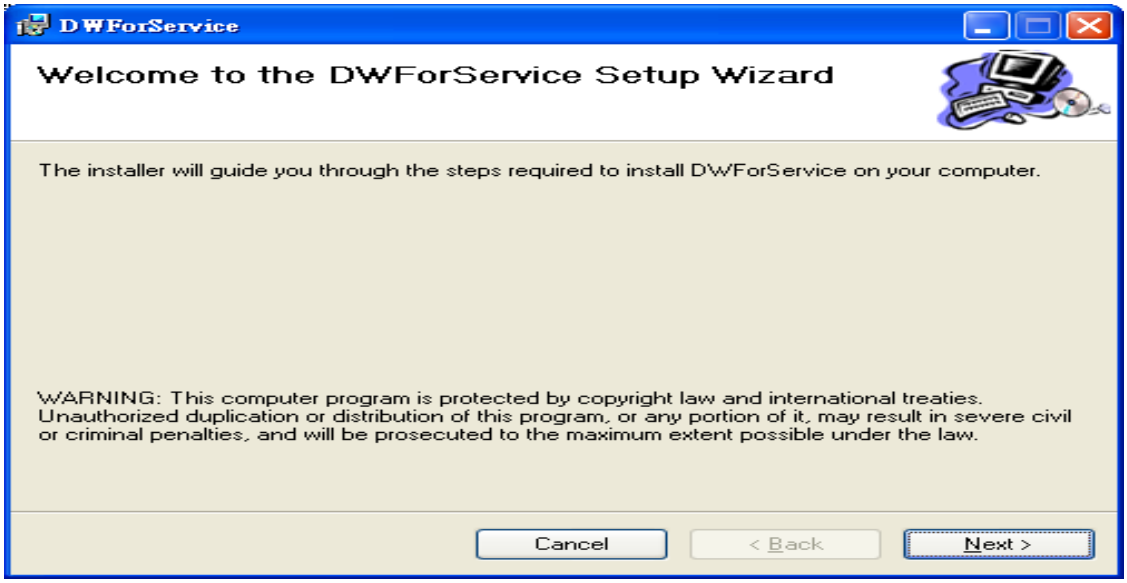

Choose a item of what you want. Click “Next” button to continue.

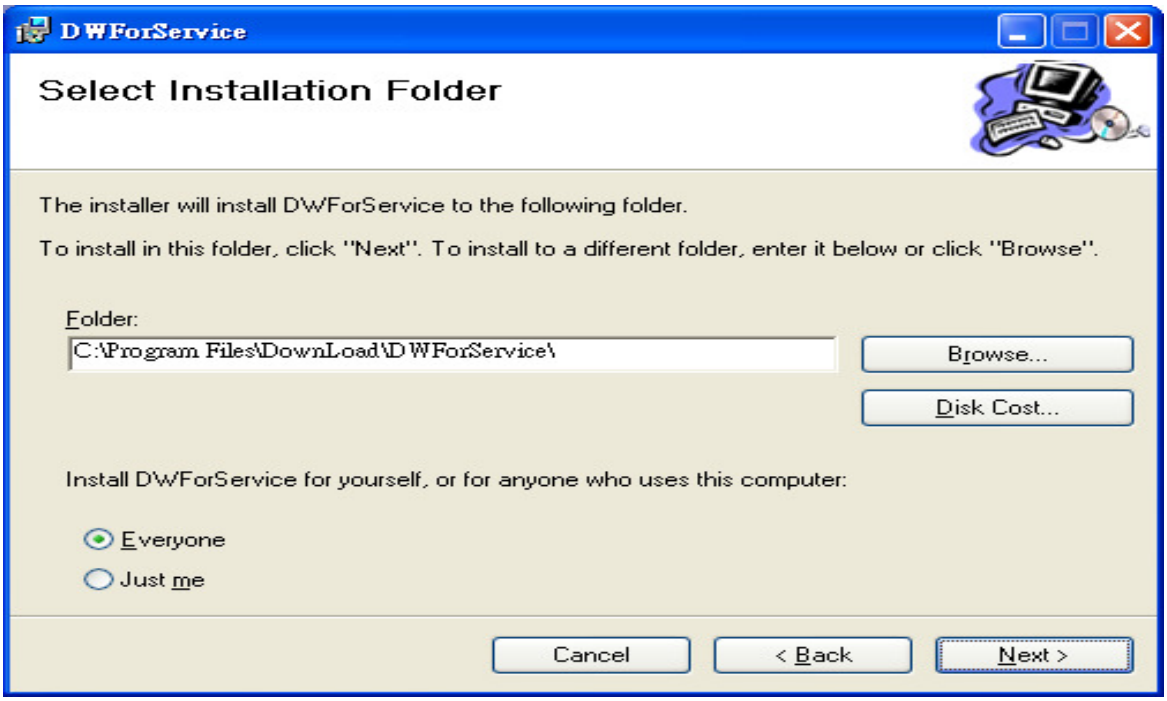

Make sure of setup is correct , Click “Next” Button to Start installing.

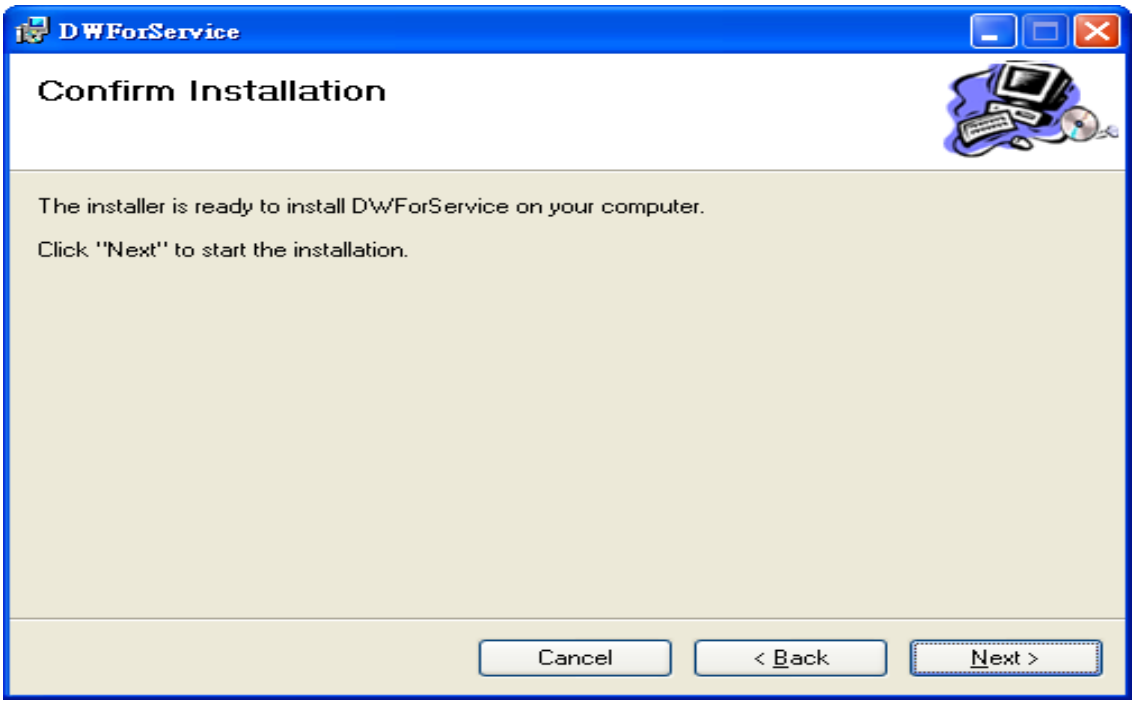

Installation finish, Click “Close” button to finish.

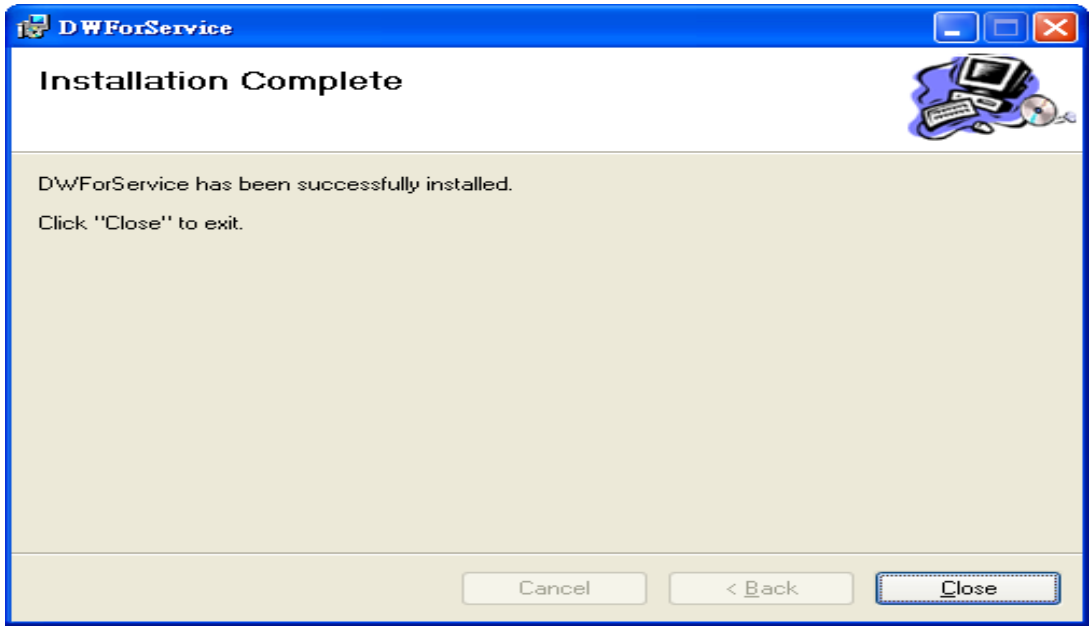

If you want to remove this software ,please go to “Console” and choose “add/remove Install” to remove DWForService .

It will present a shortcut in the desktop after installing finish.

This is DWForService download software.

2. User Interface for Service

Will present the screen of follows after executing the software.

Description as follows.

1. Choose PCBA item is for Reformat the PCBA with Calibration. .

   Choose MMI item only is for Upgrade customization SW , no need to calibration.

   If you want change it please modify “C:\Program Files\DownLoad\DWForService \LGDownLoad.ini”

   Station=2 // 1:is PCBA D/L; 2:is MMI D/L

2. Choose Model and Model Name.

3. Choose “Bin file” and “Search Dir” will to use .BIN file.（MMI bin file Download will skip Security & RF ,EEP Area ; PCBA bin file will over write Security & RF ,EEP Area）.

If you only choose “Search Dir” , it will to use .fls, eep, dffs, cust files.

Example:

This example is choose “GB110-00-V10g-404-XX-FEB-10-2009_BIN” to download.

Click the button with red mark then present below picture. Find the software with “GB110-00-V10g-404-XX-FEB-10-2009_BIN”.

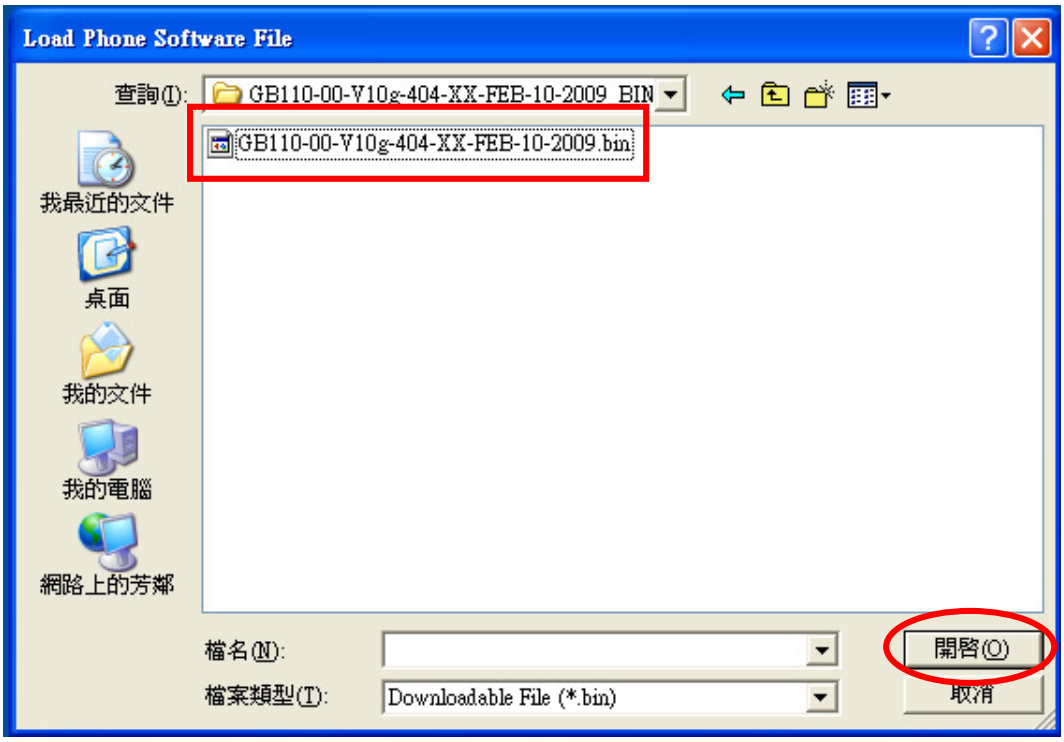

Choose the “GB110-00-V10g-404-XX-FEB-10-2009_BIN”, and then click the button with red mark .

4. Choose Comport number.

5. Click “RUN” button to execute.

3.Download flow

1. Start Download

Will present download window after make sure of setting no error

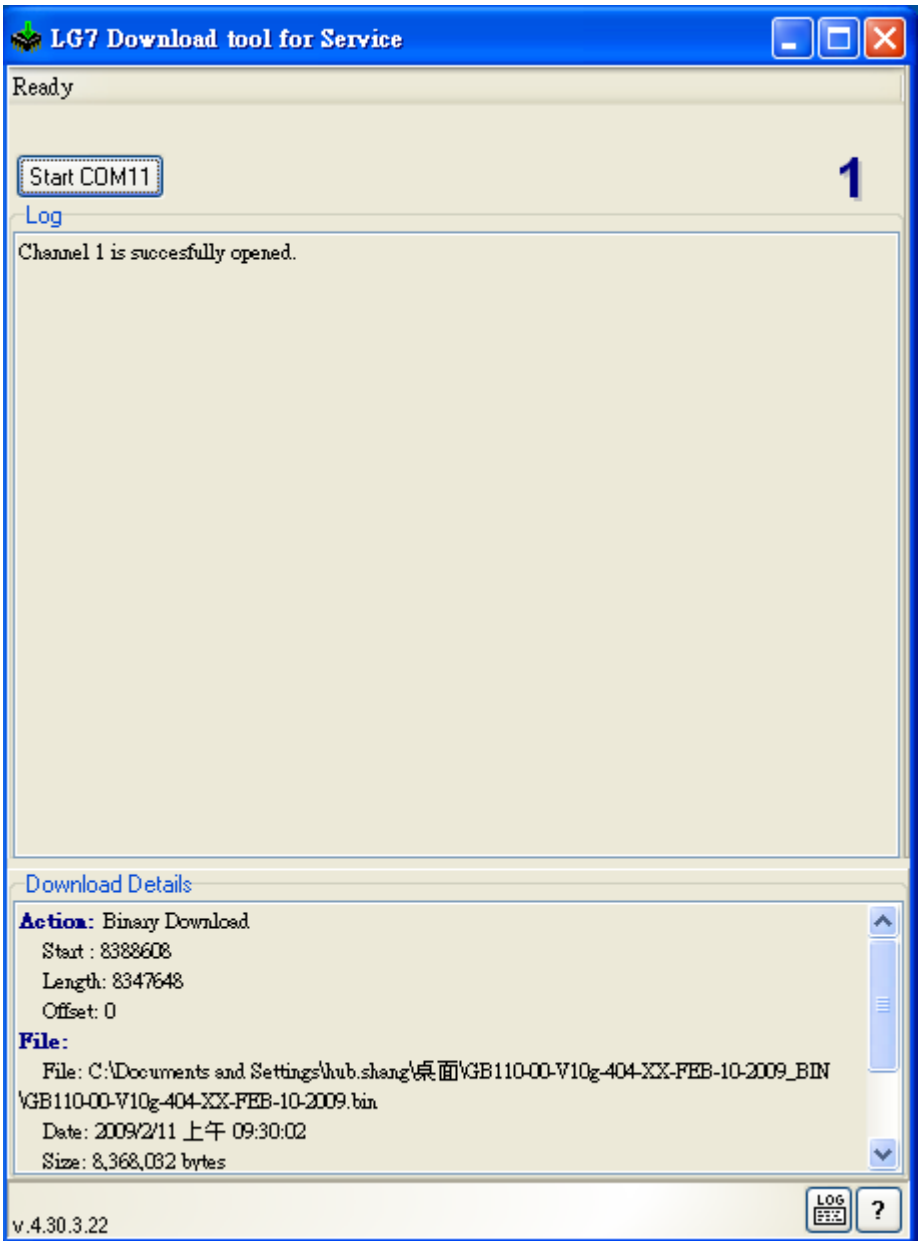

When appear above picture. Will automatic execute download program after DUT open power.

2. Downloading

Download program will according to software download. Every software will display in List.

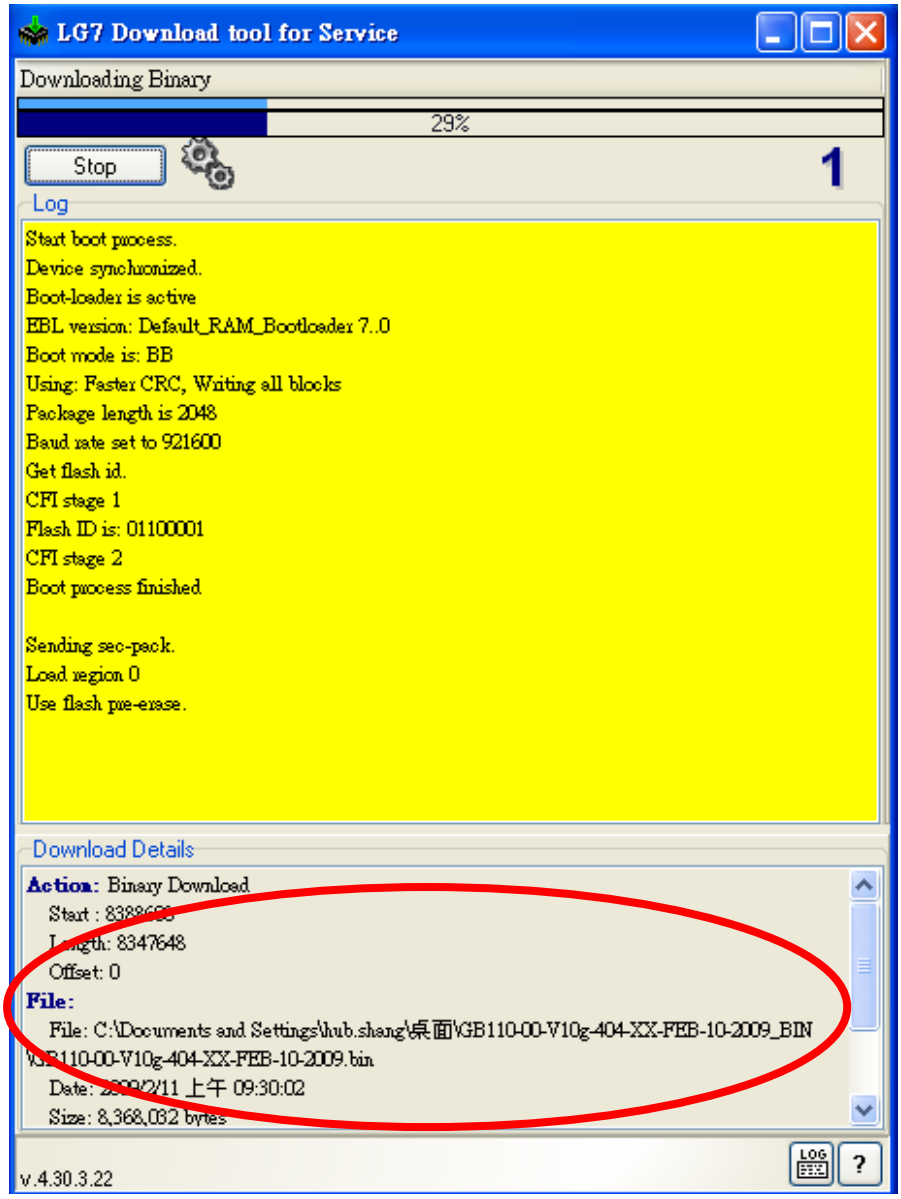

3. DownLoad Fail

If download fail that it will show red and display progress in log window。

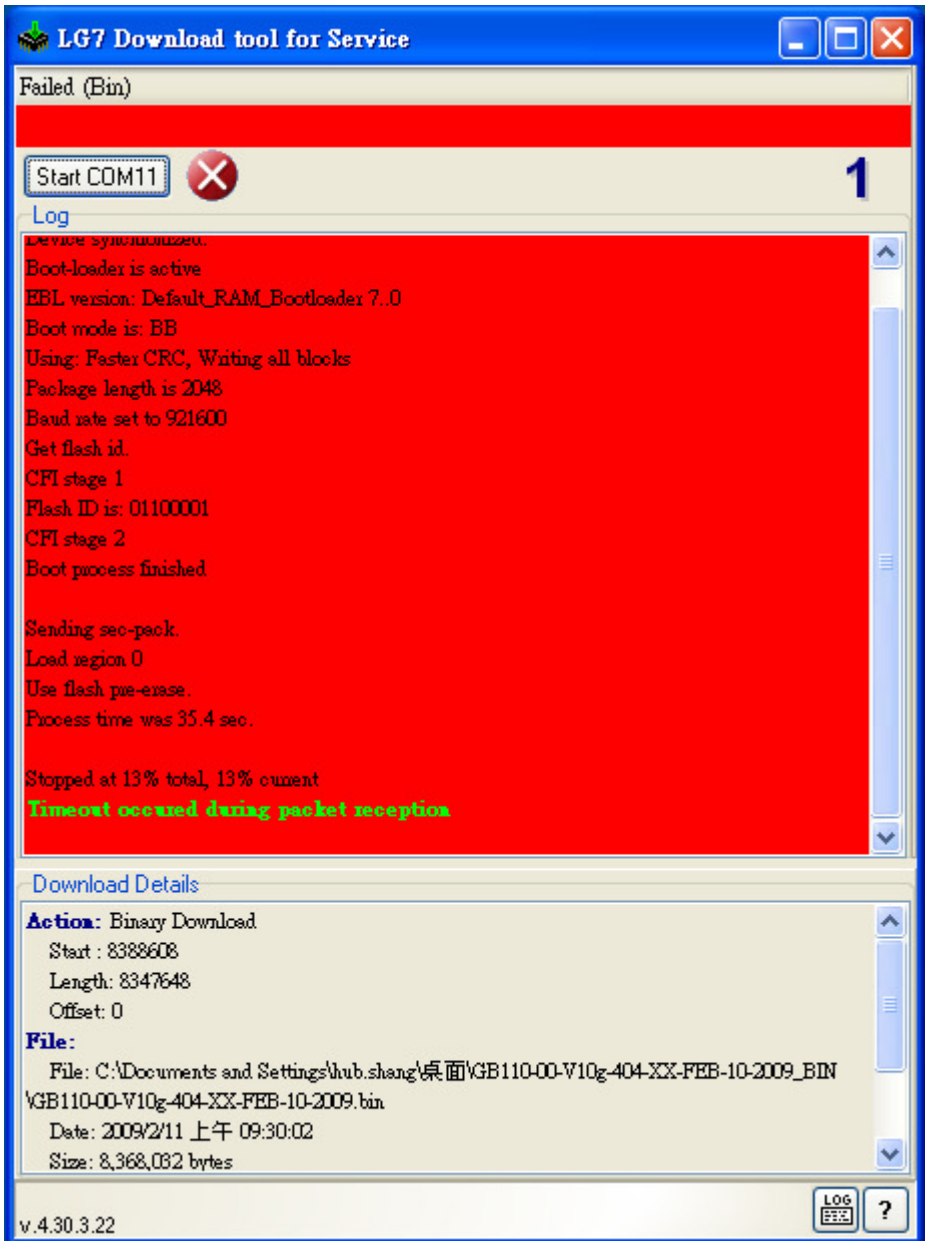

Fig.2 DownLoad success

DownLoad Pass will display green color.

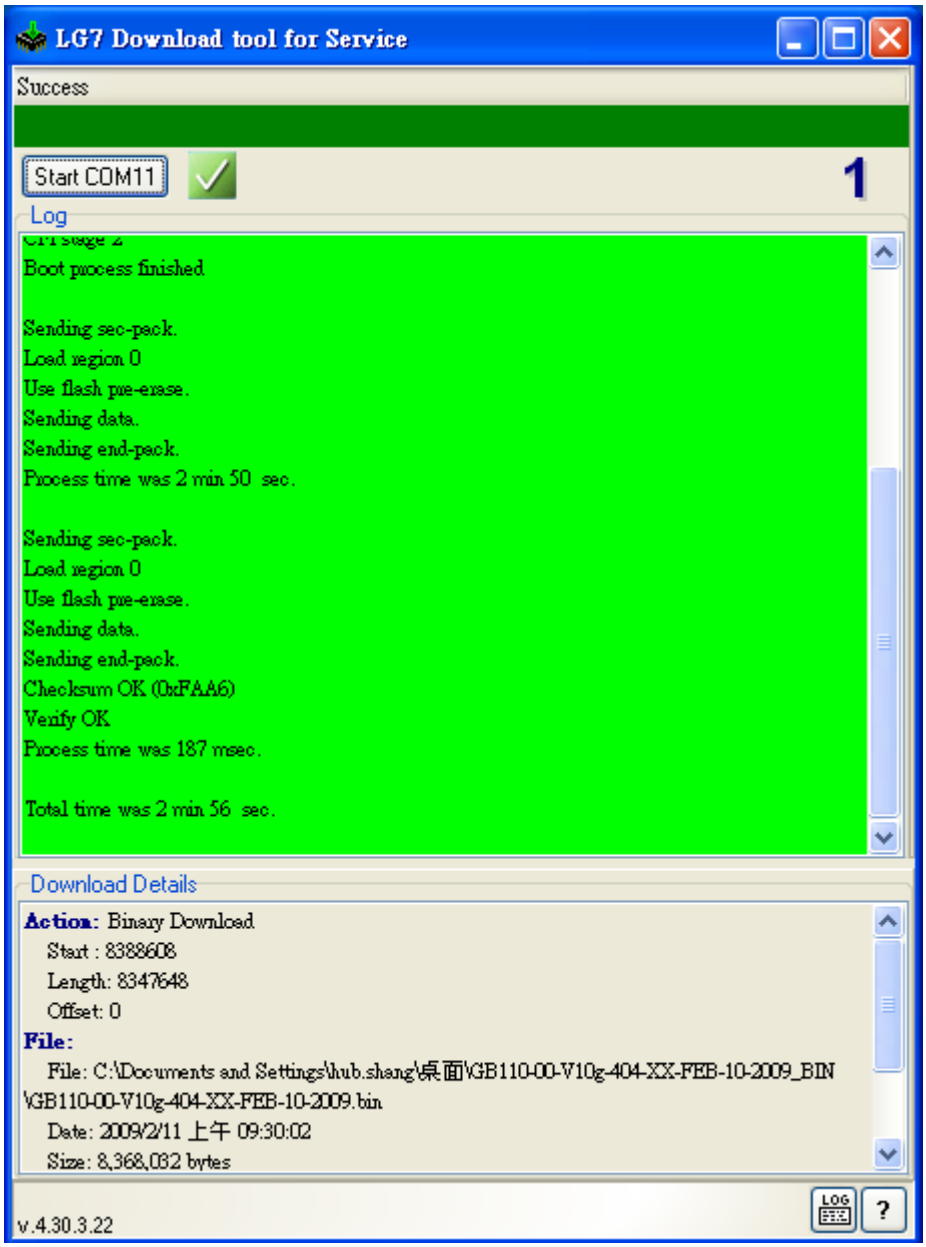

6. BLOCK DIAGRAM

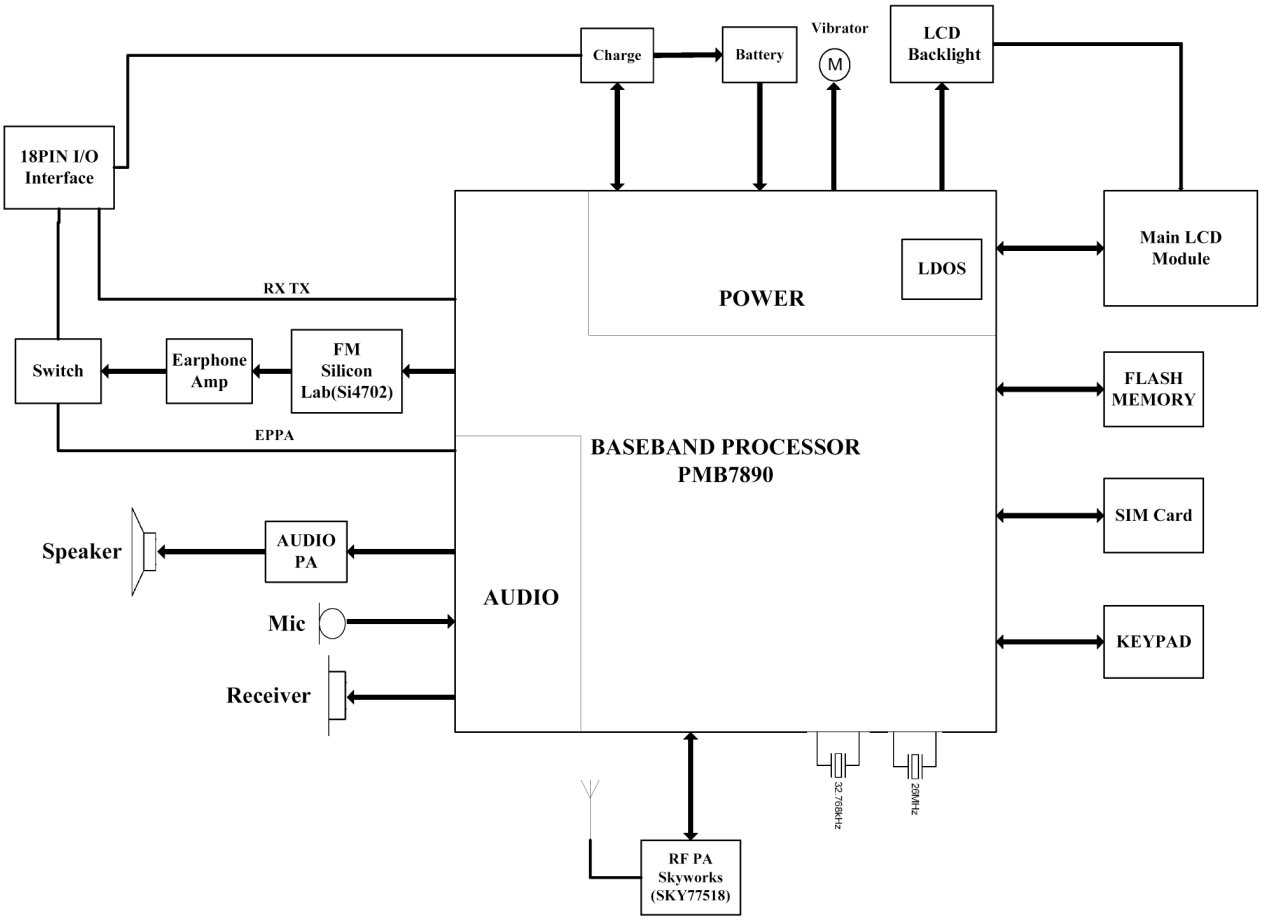

7. CIRCUIT DIAGRMA

MODE	T_OUT2 (VLOGIC)	INPUT CONTROL BITS	
		TX EN	BS
STANDBY	0	X	X
GSM_RX	1	0	0
DCS_RX	1	0	1
GSM_TX	1	1	0
DCS_TX	1	1	1

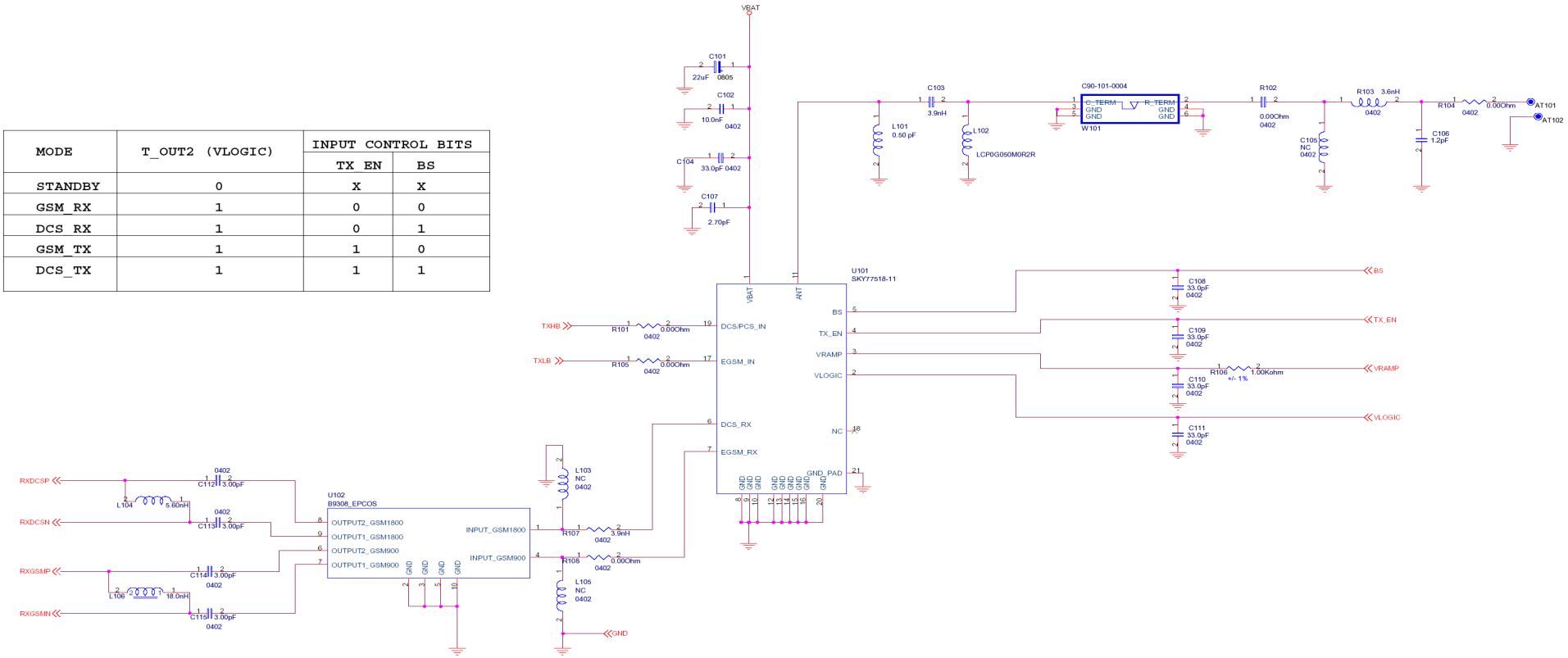

Parameter		Symbol	Test condition	Min	Type	Max	Unit
Supply voltage		VCC	-----	2.7	3.3	4.8	V
VLOGIC control voltage	LOW	VLOGIC_LOW	-----	-0.1	---	0.5	V
	HIGH	VLOGIC_HIGH		1.2		VCC	
Supply current		ICC	-----	0		1.8	A
VLOGIC current		ILOGIC	VLOGIC≤2.7 V TX_EN≤0.4 V BS≤0.4 V	---	1	20	uA

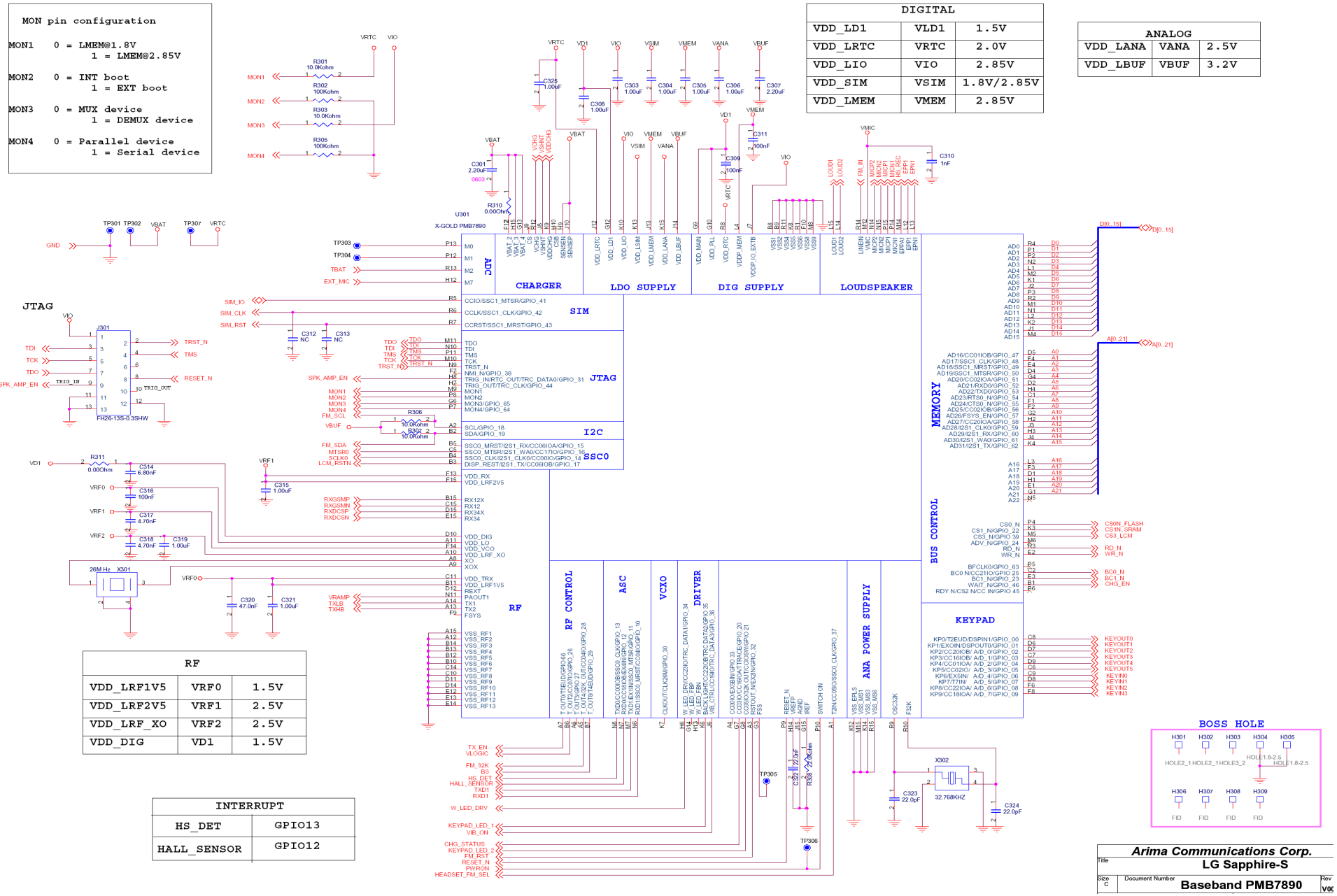
MON pin configuration
MON1 0 = LMEM@1.8V
1 = LMEM@2.85V
MON2 0 = INT boot
1 = EXT boot
MON3 0 = MUX device
1 = DEMUX device
MON4 0 = Parallel device
1 = Serial device
DIGITAL
VDD_LD1 VLD1 1.5V
VDD_LRTC VRTC 2.0V
VDD_LIO VIO 2.85V
VDD_SIM VSIM 1.8V/2.85V
VDD_LMEM VMEM 2.85V
ANALOG
VDD_LANA VANA 2.5V
VDD_LBUF VBUF 3.2V
RF
VDD_LRF1V5 VRF0 1.5V
VDD_LRF2V5 VRF1 2.5V
VDD_LRF_XO VRF2 2.5V
VDD_DIG VD1 1.5V
INTERRUPT
HS_DET GPIO13
HALL_SENSOR GPIO12
U301
X-GOLD PMB7890
ADC
CHARGER
LDO SUPPLY
DIG SUPPLY
LOUDSPEAKER
SIM
JTAG
I2C
SSC0
RF
RF CONTROL
ASC
VCXO
DRIVER
ANA POWER SUPPLY
MEMORY
BUS CONTROL
KEYPAD
BOSS HOLE
Arima Communications Corp.
LG Sapphire-S
Baseband PMB7890

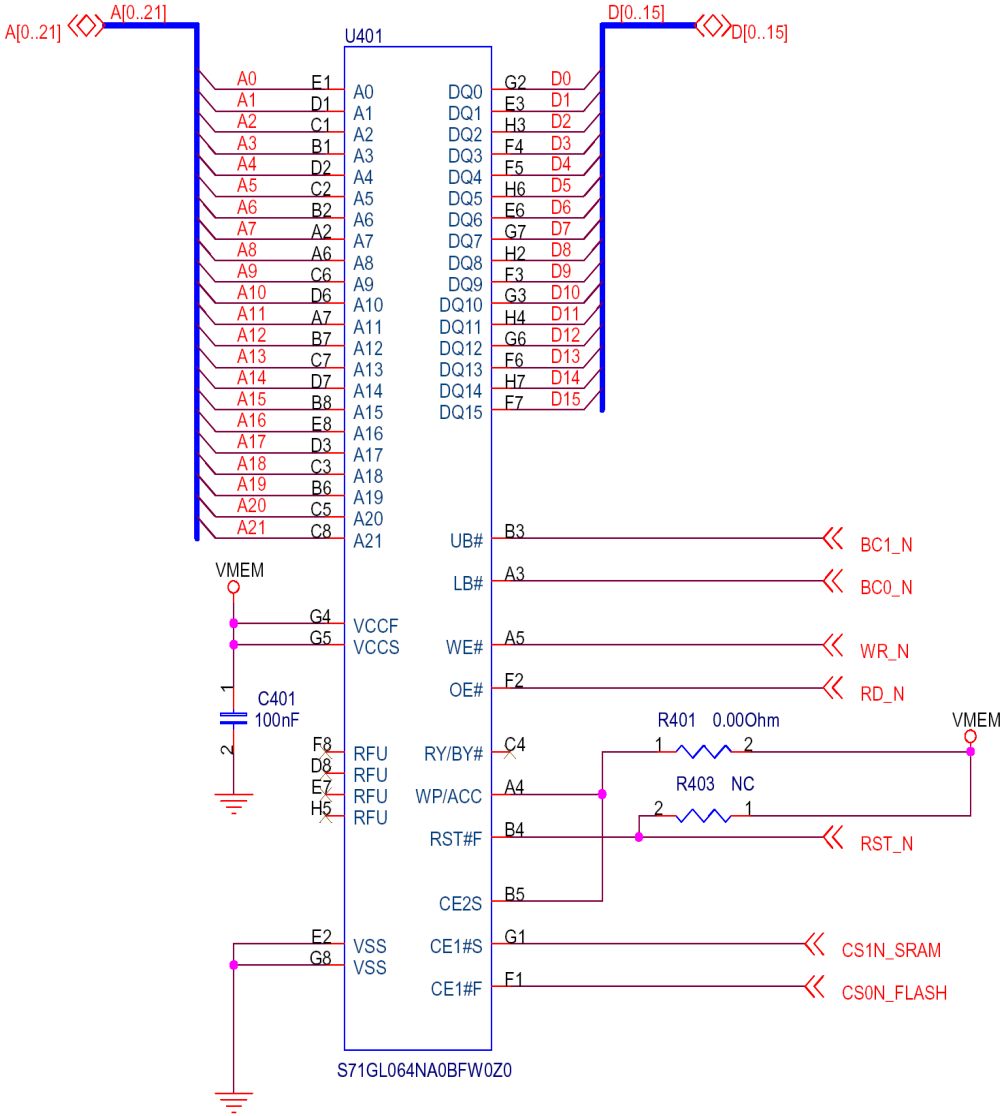
A[0..21]
A[0..21]
U401
D[0..15]
D[0..15]
A0 E1 A0
A1 D1 A1
A2 C1 A2
A3 B1 A3
A4 D2 A4
A5 C2 A5
A6 B2 A6
A7 A2 A7
A8 A6 A8
A9 C6 A9
A10 D6 A10
A11 A7 A11
A12 B7 A12
A13 C7 A13
A14 D7 A14
A15 B8 A15
A16 E8 A16
A17 D3 A17
A18 C3 A18
A19 B6 A19
A20 C5 A20
A21 C8 A21
DQ0 G2 D0
DQ1 E3 D1
DQ2 H3 D2
DQ3 F4 D3
DQ4 F5 D4
DQ5 H6 D5
DQ6 E6 D6
DQ7 G7 D7
DQ8 H2 D8
DQ9 F3 D9
DQ10 G3 D10
DQ11 H4 D11
DQ12 G6 D12
DQ13 F6 D13
DQ14 H7 D14
DQ15 F7 D15
UB# B3 BC1_N
LB# A3 BC0_N
WE# A5 WR_N
OE# F2 RD_N
VMEM
G4 VCCF
G5 VCCS
C401
100nF
F8 RFU
D8 RFU
E7 RFU
H5 RFU
RY/BY# C4
WP/ACC A4
RST#F B4
CE2S B5
R401 0.00Ohm
R403 NC
VMEM
RST_N
E2 VSS
G8 VSS
CE1#S G1 CS1N_SRAM
CE1#F F1 CS0N_FLASH
S71GL064NA0BFW0Z0

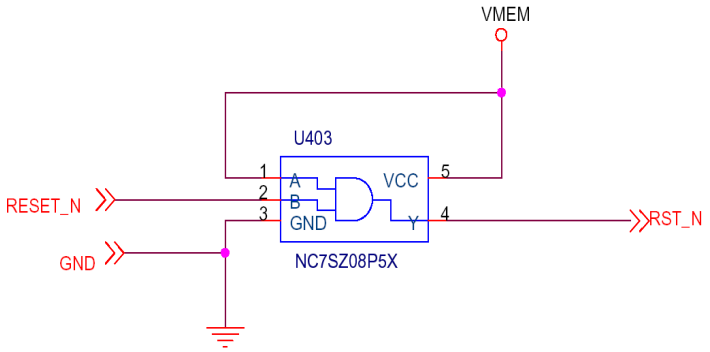
VMEM
U403
RESET_N
GND
A
B
GND
VCC
Y
RST_N
NC7SZ08P5X

Speaker&Receiver

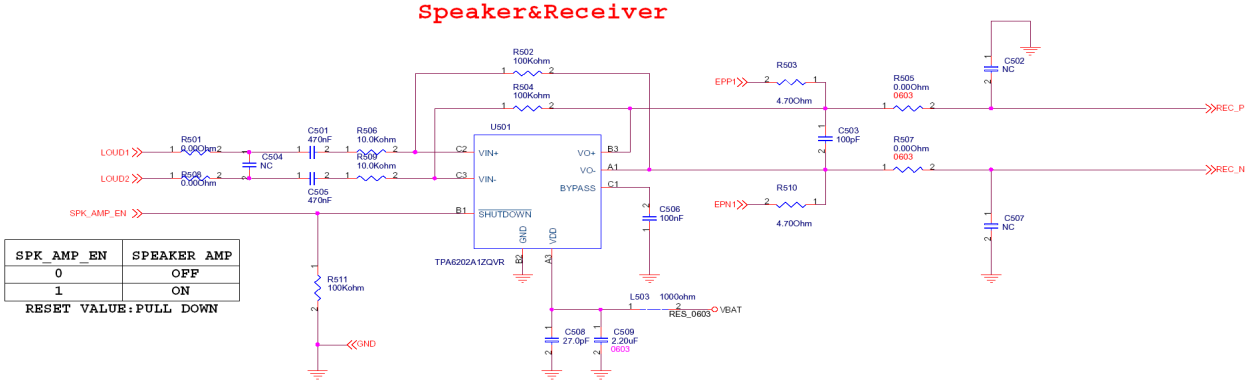

SPK_AMP_EN	SPEAKER AMP
0	OFF
1	ON

RESET VALUE:PULL DOWN

Headset Micorphone

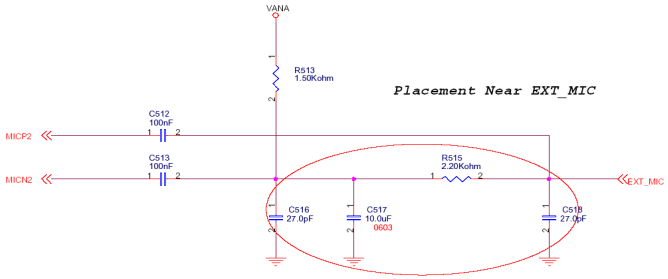

Handset Microphone

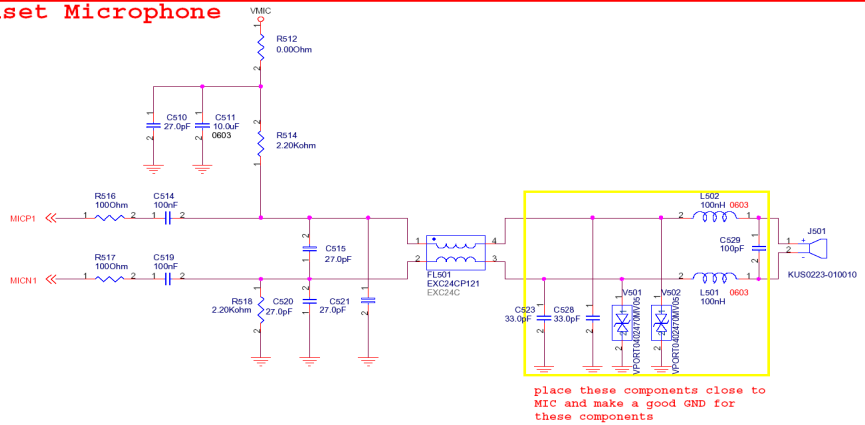

place these components close to MIC and make a good GND for these components

Headset Amplifier

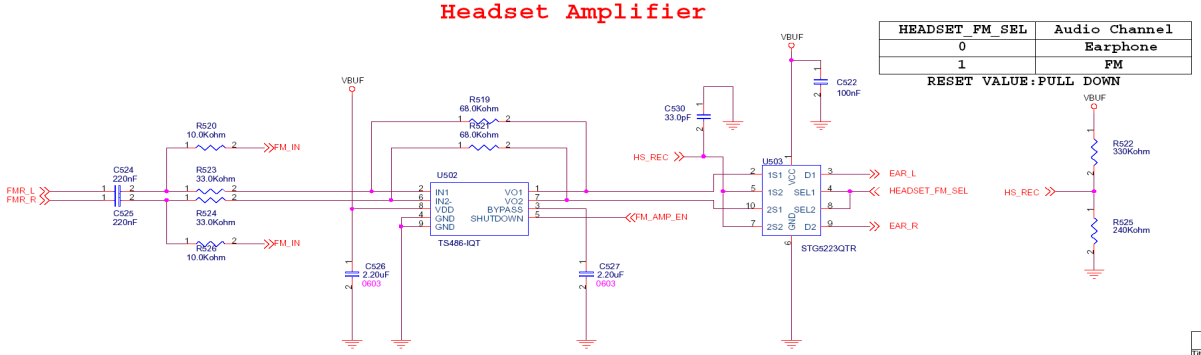

HEADSET_FM_SEL	Audio Channel
0	Earphone
1	FM

RESET VALUE:PULL DOWN

Arima Communications Corp.

Title: LG Sapphire-S

CONNECTOR

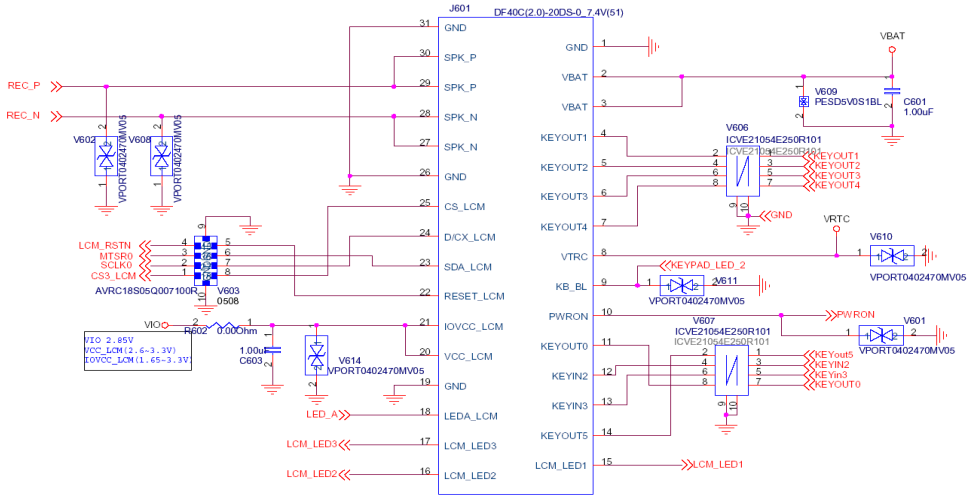

place all these parts close to I/O connector

KEYPAD_LED_2	KEYPAD2 LED
0	OFF
1	ON

RESET VALUE:PULL DOWN

KEY Function

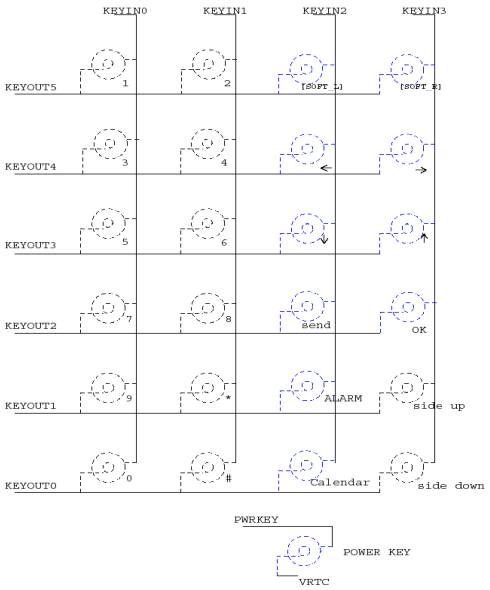

KEY PAD connector

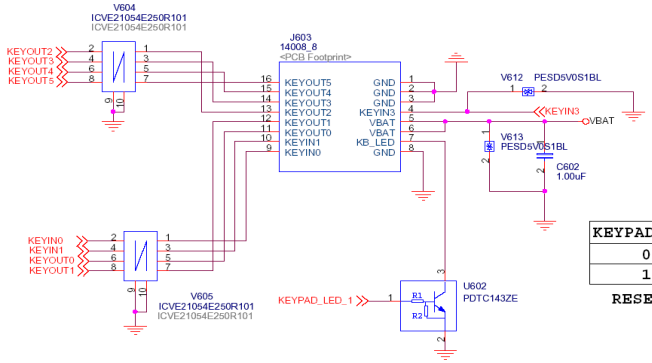

KEYPAD_LED_1	KEYPAD1 LED
0	OFF
1	ON

RESET VALUE:PULL DOWN

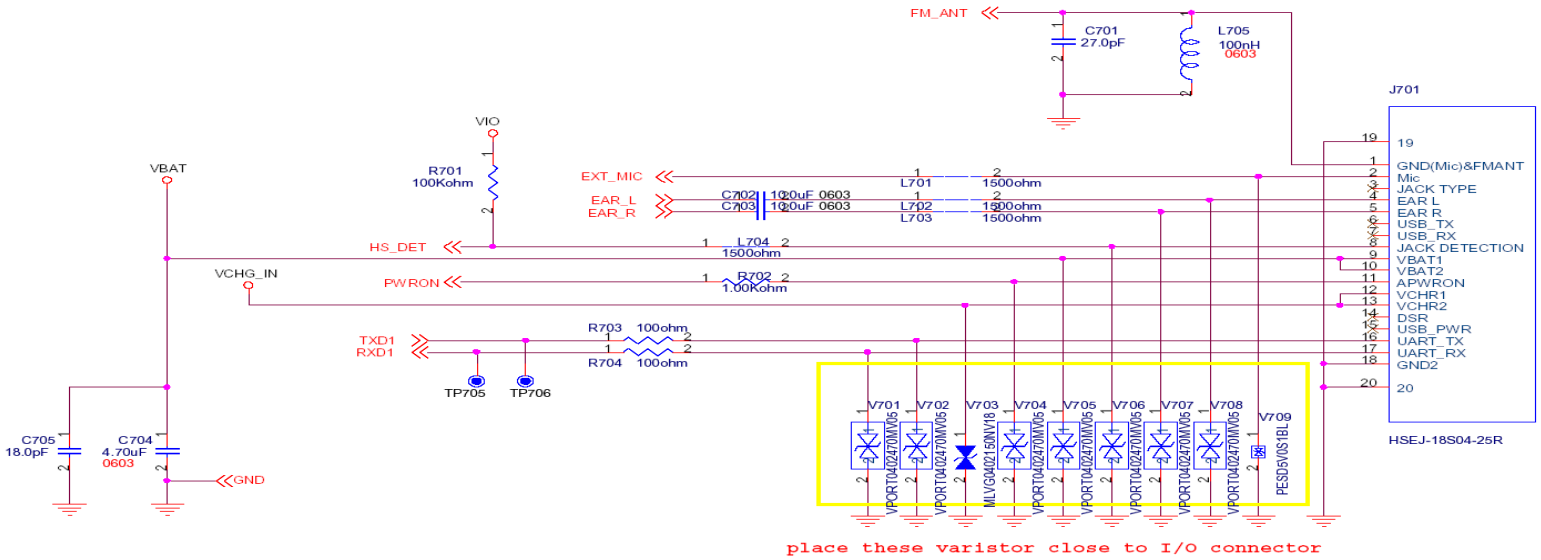

place these varistor close to I/O connector

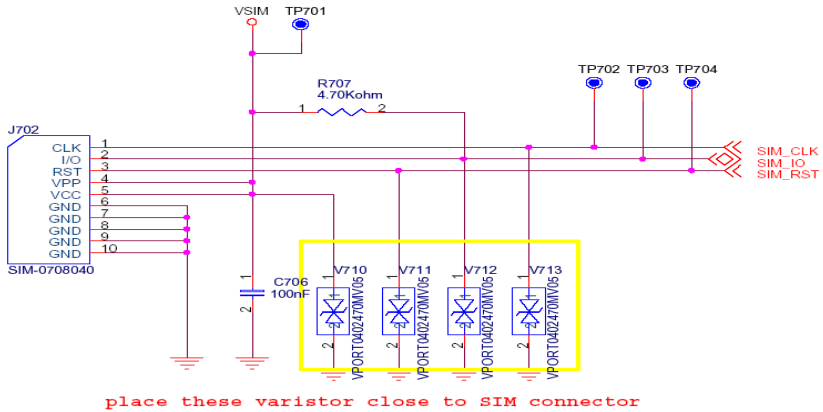

place these varistor close to SIM connector

VIBRATOR

VIB_ON	VIB state
0	OFF
1	ON

RESET VALUE:PULL DOWN

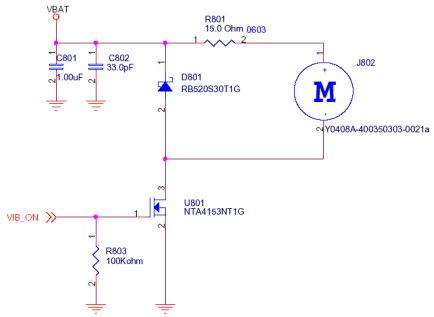

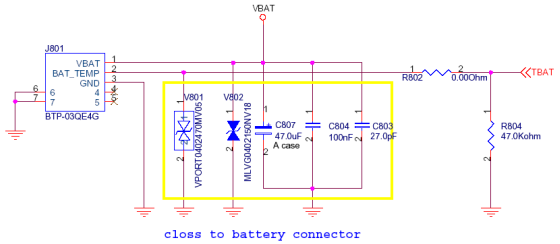

close to battery connector

CHARGING CIRCUIT

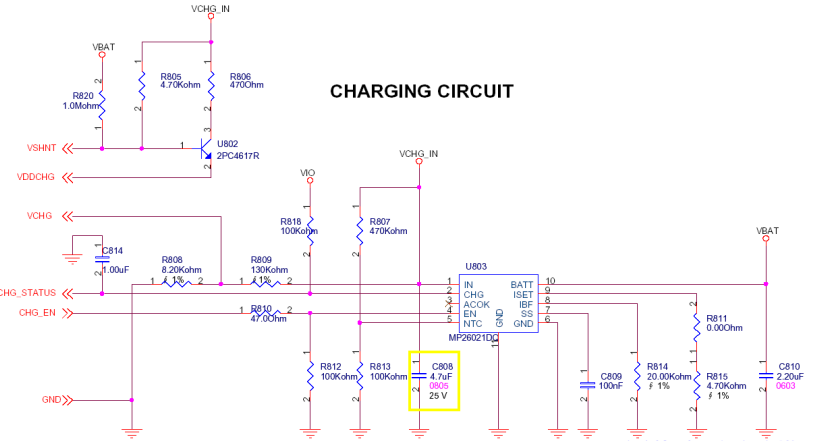

close to charger IC

I(Trickle Charge)=I(CHG)*10%

I(CHG)=1.7Kohm/R(ISET)

I(BF)=1A*1.7Kohm/R(IBF)

T(soft star time)=Css*20ms/0.1uF

CHARGING PUMP

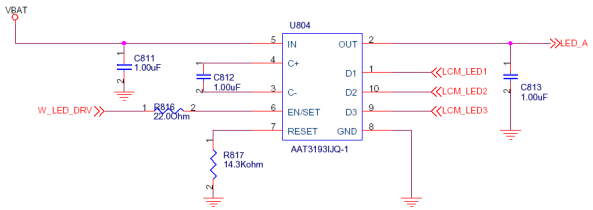

place these three capacitors close to U804

Parameter	Symbol	Test condition	Min	Type	Max	Unit
Digital supply voltage	VD		2.7	---	5.5	V
Anolog supply voltage	VA		2.7	---	5.5	V
Anolog powerdown current	IPDA	ENABLE=0	---	1.5	5	uA
Digital powerdown current	IPDD	ENABLE=0	---	1	6	uA

FM

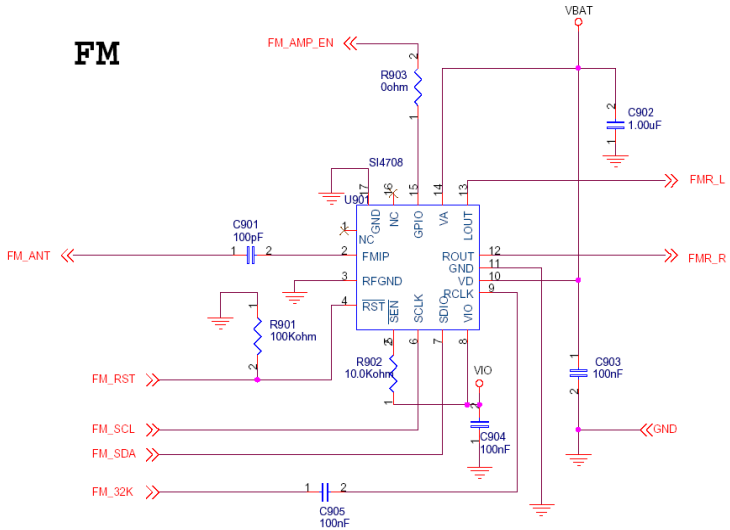

HALL SENSOR

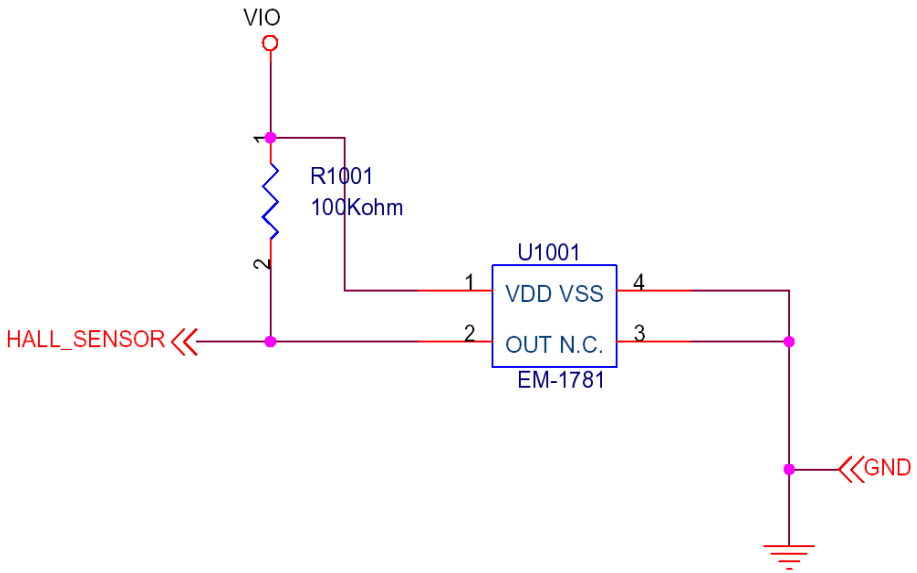
VIO
1
R1001
100Kohm
2
U1001
1
VDD VSS
4
HALL_SENSOR
2
OUT N.C.
3
EM-1781
GND

8. BGA IC PIN Check

8.1 BGA PIN Check of MCU (PMB7890)

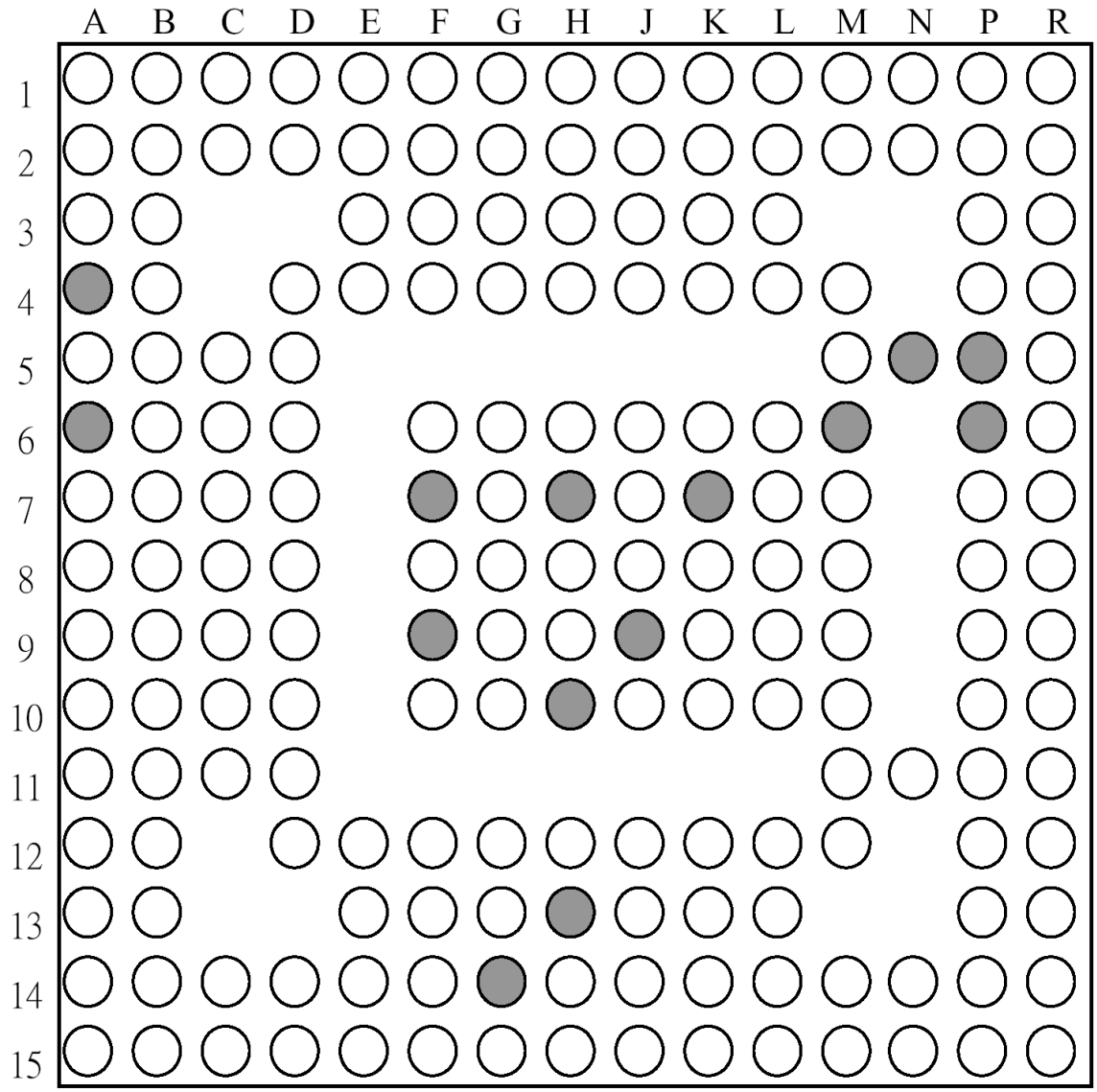

○ BGA use

● BGA non-use

8.2 BGA PIN Check of Memory (S71GL064NA0BFW0Z0)

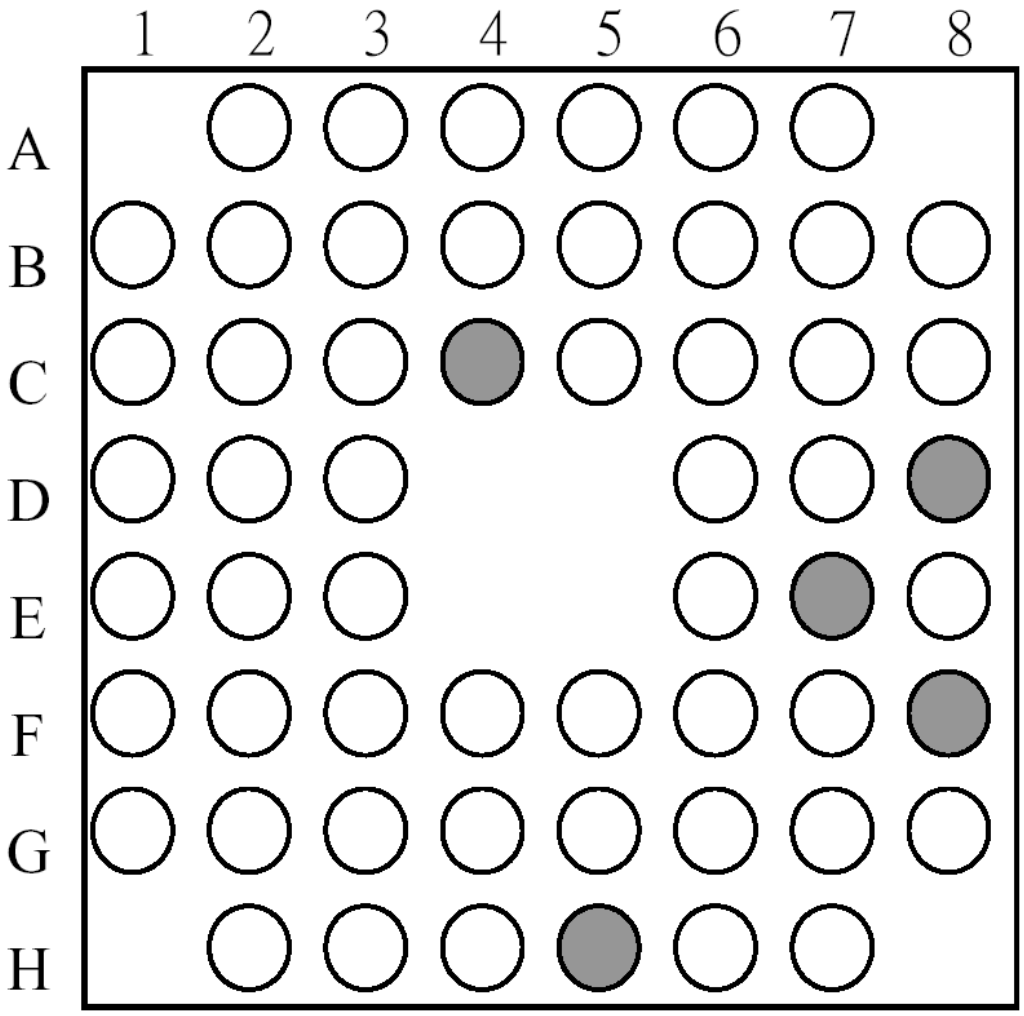

○ BGA use

● BGA non-use

9. PCB LAYOUT

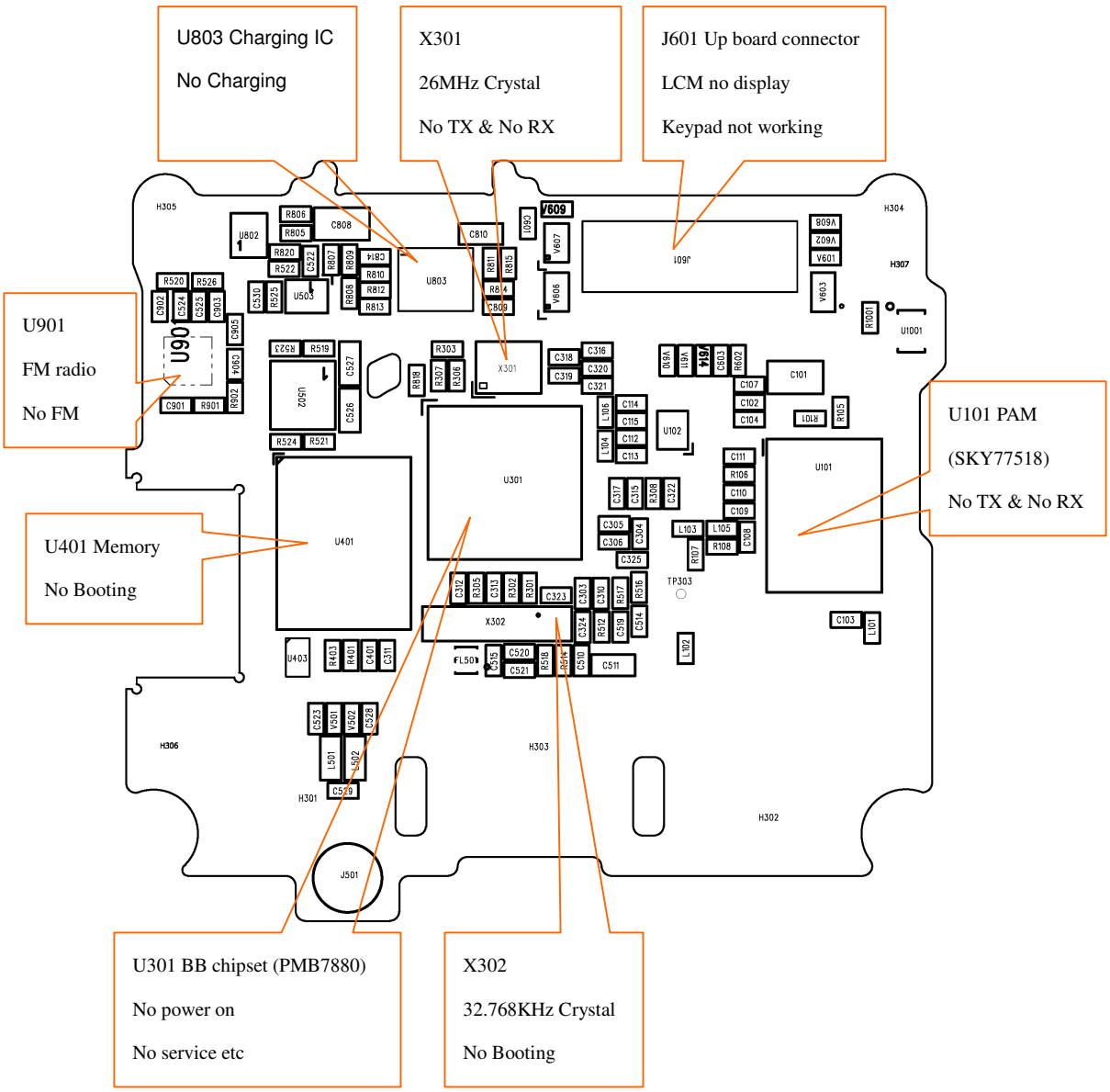
U803 Charging IC
No Charging
X301
26MHz Crystal
No TX & No RX
J601 Up board connector
LCM no display
Keypad not working
U901
FM radio
No FM
U101 PAM
(SKY77518)
No TX & No RX
U401 Memory
No Booting
U301 BB chipset (PMB7880)
No power on
No service etc
X302
32.768KHz Crystal
No Booting

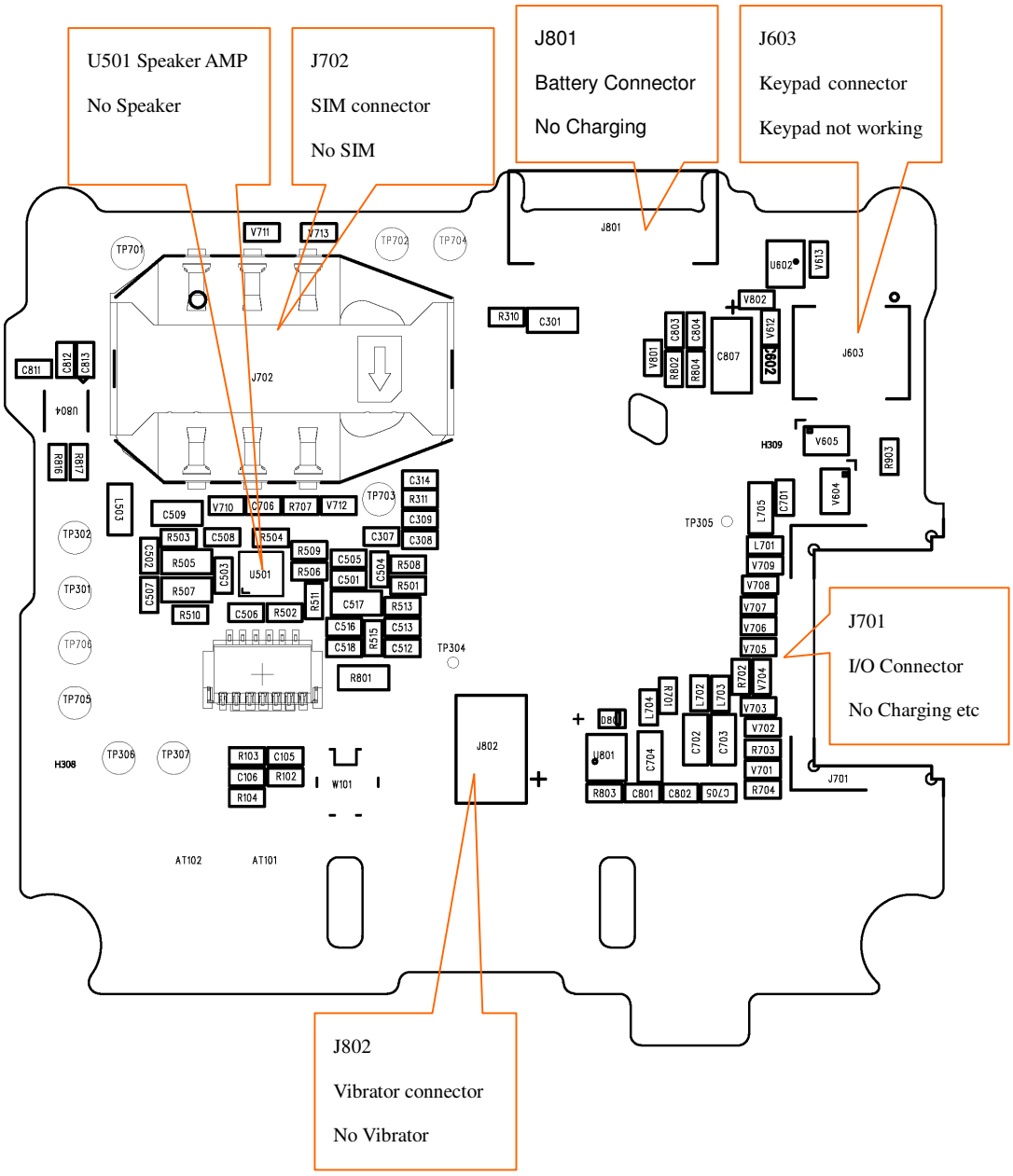
U501 Speaker AMP
No Speaker
J702
SIM connector
No SIM
J801
Battery Connector
No Charging
J603
Keypad connector
Keypad not working
J701
I/O Connector
No Charging etc
J802
Vibrator connector
No Vibrator

10.Engineering Mode

1 Function Test

1.1 Test Purpose

To verify handset functional is pass or fail when assembled by visual check.

1.2 Test Facilities List

1.LCD

2.Earphone

3.Vibrator

4.GSM tester

5.FM transmitter

1.3 Test Procedure

1.3.1 Auto test sequence

1. Operator not need to insert test SIM card, and enter ” *#878#” to check “auto test” as below.
2. When operator into function test mode, we just press “yes” key or “enter” key to into next test item.
3. When use auto test, every test item always turn on together.

No.	Test item	Verifying item
1	LCD	Display check (All white, all black, red, blue, green test) Every screen is 0.5 second 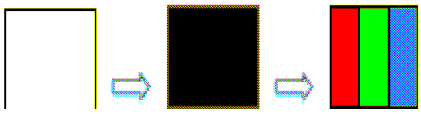
2	LCD & LED /Illumination	LCD Backlight
		All Keypad LED
3	Vibrator	Vibrator function check (Always on)
4	Keyboard + Speaker	All keys function check Method 1: screen shows all icons one by one then it disappear in screen. Method 2: screen shows icon of press it as phone instruction.
		Speaker check
5	Audio (Mic_ Receiver loop)	Main Mic to Main Receiver audio loop check
6	Headsets (Earpiece)	Aux-Mic to Aux Receiver audio loop check
7	Melody	Speaker and Melody function check (Always on/Set max volume)
8	FM	1. Testing FM through headset (earpiece) 2. Testing FM through Battery cover (external Antenna) Testing FM through SPK
9	Antenna	Antenna circuit check by Radiation Power Turn on GSM Power level 5 @ Ch40 for 900/1800 band

11.Calibration

11.1 Test equipment setup

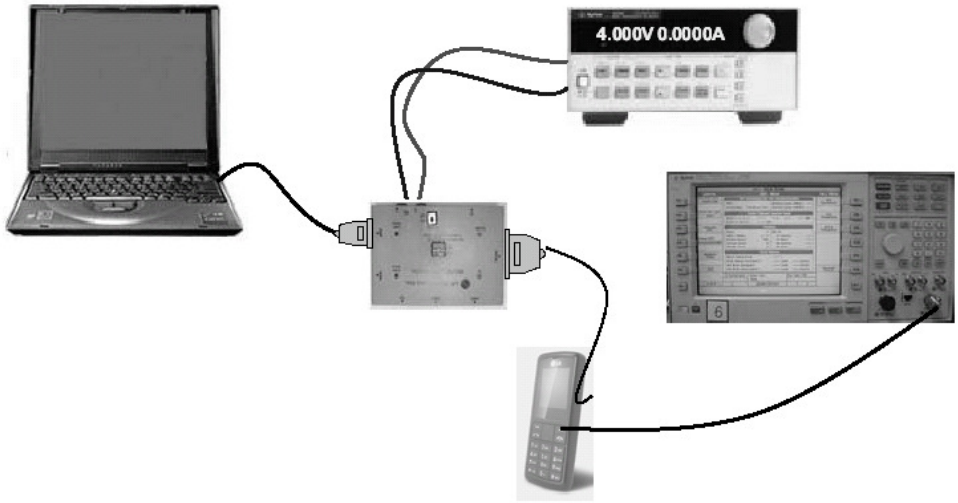

11.2 APT Technologies (calibration tool)

11.2.1 Installation

Before install this program, it must install GPIB, VISA drivers and .Net Framework 2.0 at first. Press the next to continue the installation.

Fig.3 APT Technologies installation

Choose the wireless communication test set type. Select Agilent 8960 and press next to continue installation. Only Agilent 8960 is the only available for selection at present, CMU200 has no function.

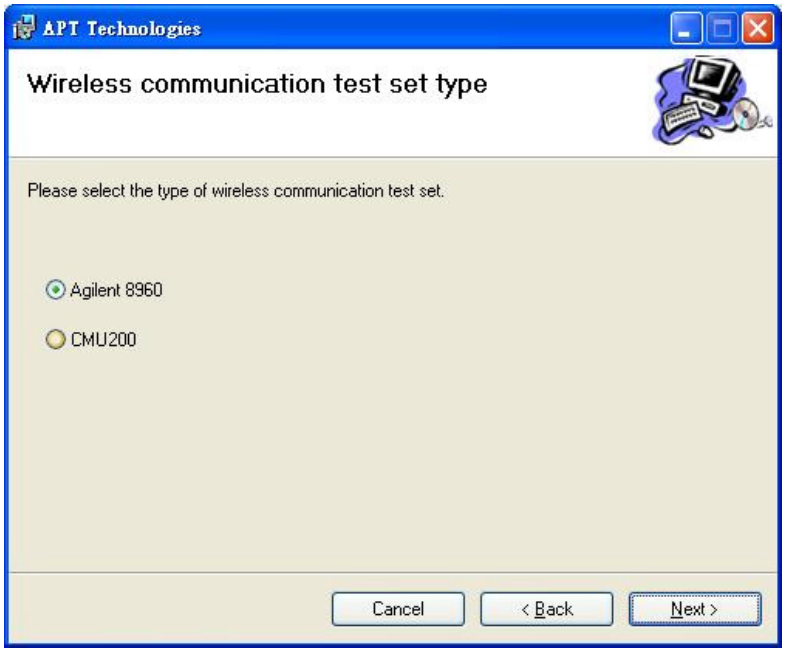

Fig.4 Choose the wireless communication test set type

Choose the installing catalogue; if it is necessary you can change the folder to install. Press next to continue the installation.

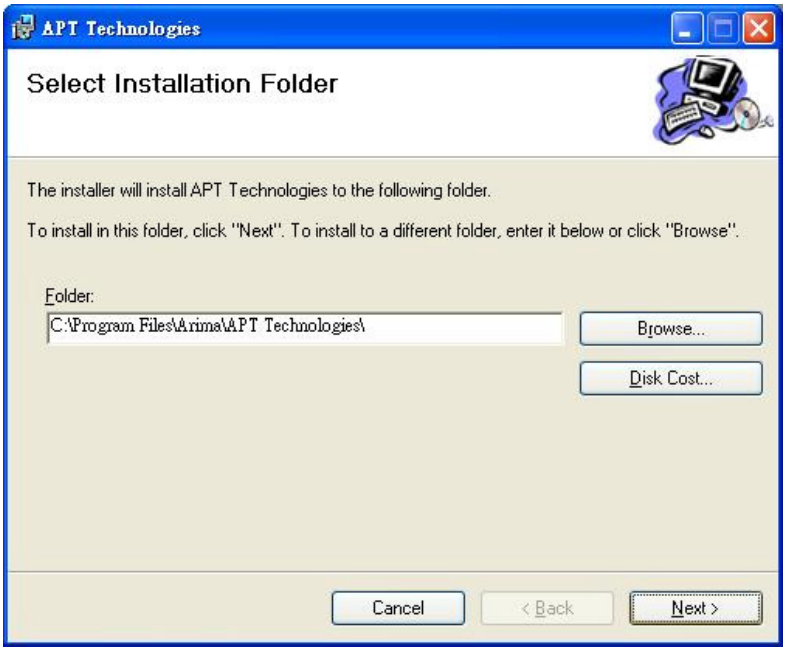

Fig.5 Choose the catalogue to install

Choose the wireless communication test set type. Select Agilent 8960 and press next to continue installation. Only Agilent 8960 is the only available for selection at present, CMU200 has no function.

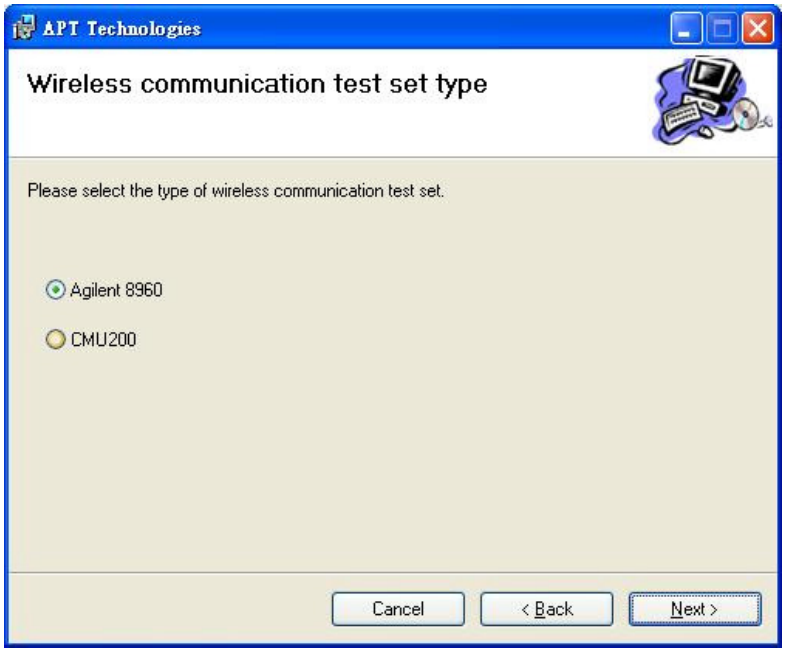

Fig.6 Choose the wireless communication test set type

Choose the installing catalogue; if it is necessary you can change the folder to install. Press next to continue the installation.

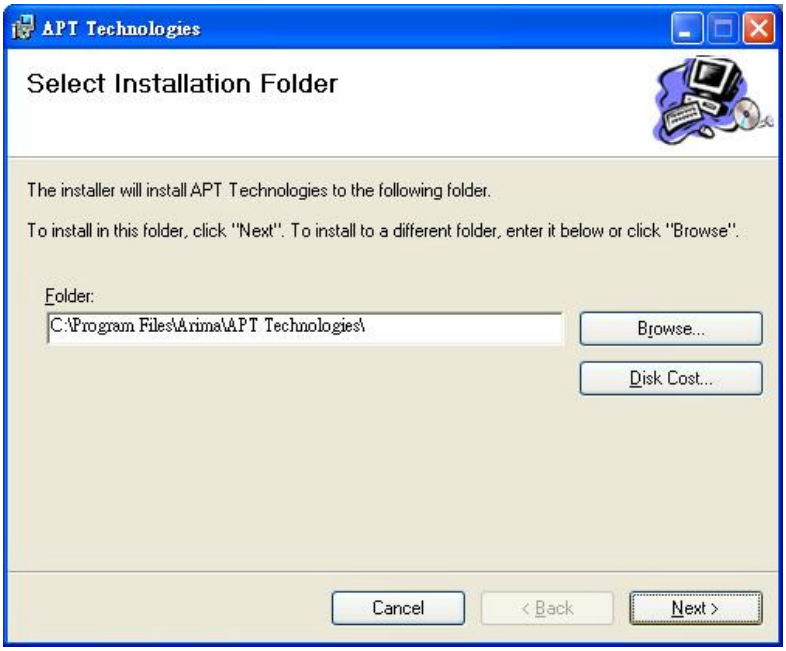

Fig.7 Choose the catalogue to install

Confirm installation and press next to install the program, if need to change setting press back to set up.

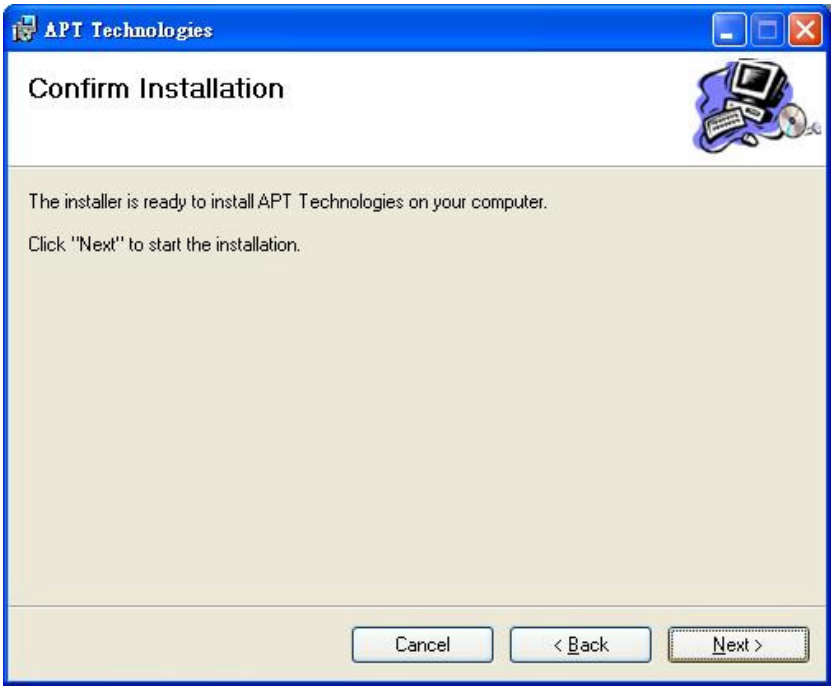

Fig.8 Confirm installing

While installing it will appear a window like Fig.9, it will begin to install the test scripts after choosing installation, if change the catalogue of installing before, this installation catalogue must keep the same with APT.

Fig.9 Installation Test Script

Installation finishes finally, pushing and closing the button finishes installing.

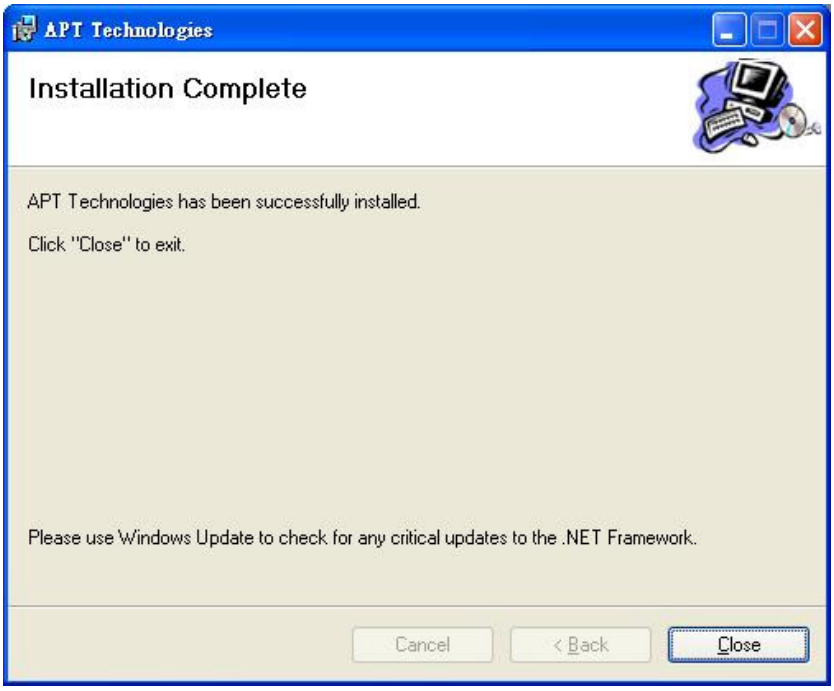

Fig.10 It finishes to install

It will present two shortcuts in the tabletop after finishing the installation:

ATP Tools Icon.

Auto Cable Loss Compensation Tools Icon.

11.2.2 User's interface

After opening the APT Program, it will appear a window like Fig.11, several proves as follows:

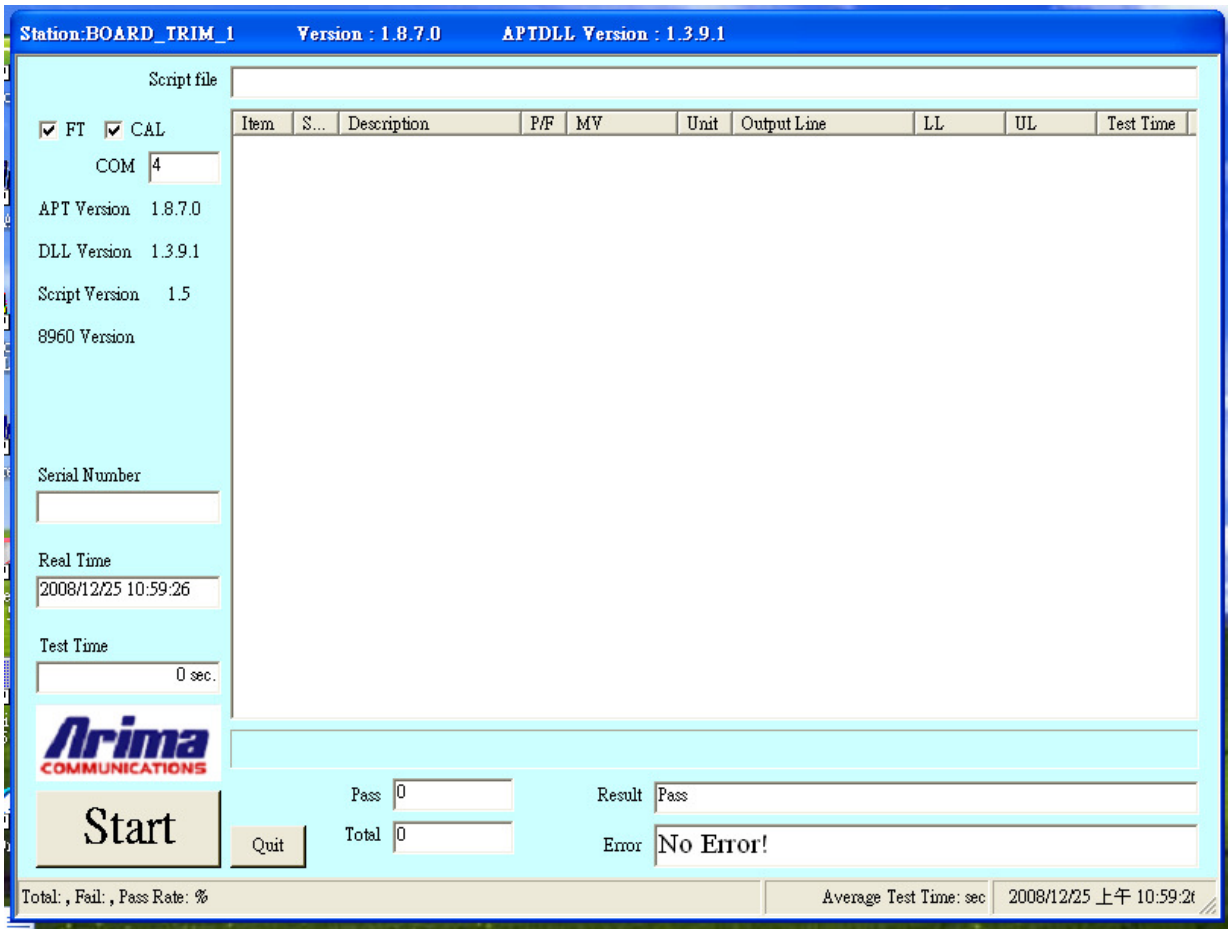

Fig.11 User's interface

1. Title: Read the station and version from equipment_config.txt, for example: Station: BOARD_TRIM_1 Version: APT V1.8.7
2. Script file: File of test script; show the testing script file location and file name.
3. FT: It will select the script for Final Test.
4. Cal: It will select the script for Calibration.
5. COM: Show the communication port connected with mobile phone at present.
6. List: The large window on the right shows the tests list at present.
7. Progress Bar: Show that the test progress at present.
8. Serial Number: Same as Bar Code.
9. Real Time: Show the time of the computer.

10. Test Time: Show the time when it has been already finished the test.

11. Arima: Company Mark, if double click this mark and input the password , will appear a window it can set the equipment_config.txt for RD.

12. Start: Begin to run the test; it will appear a window that can input Bar Code. After input the Bar Code, it will begin to run the test.

13. Quit: Close the APT program.

14. Pass: Count the quantity of Pass at present, if reopens the program it will calculate again.

15. Total: Count and quantity of test at present, if reopens the program it will calculate again.

16. Result: Show the test result at present.

17. Error: It will show the fist fail message.

18. The state bar:

    1. Total: Count the quantity of test at present.

    2. Fail: Count Fail quantity at present.

    3. Pass Rate %: Count the probability of Pass at present.

    4. Average Test Time: Count and test time equally at present.

    5. Time at present.

11.2.3 Test the program

Begin to test

After opening the program, confirms that it is errorless to set up, some lower Start will appear the Bar Code input window, such as Fig.12, begin to test like Fig.13 after scanning or inputting Bar Code.

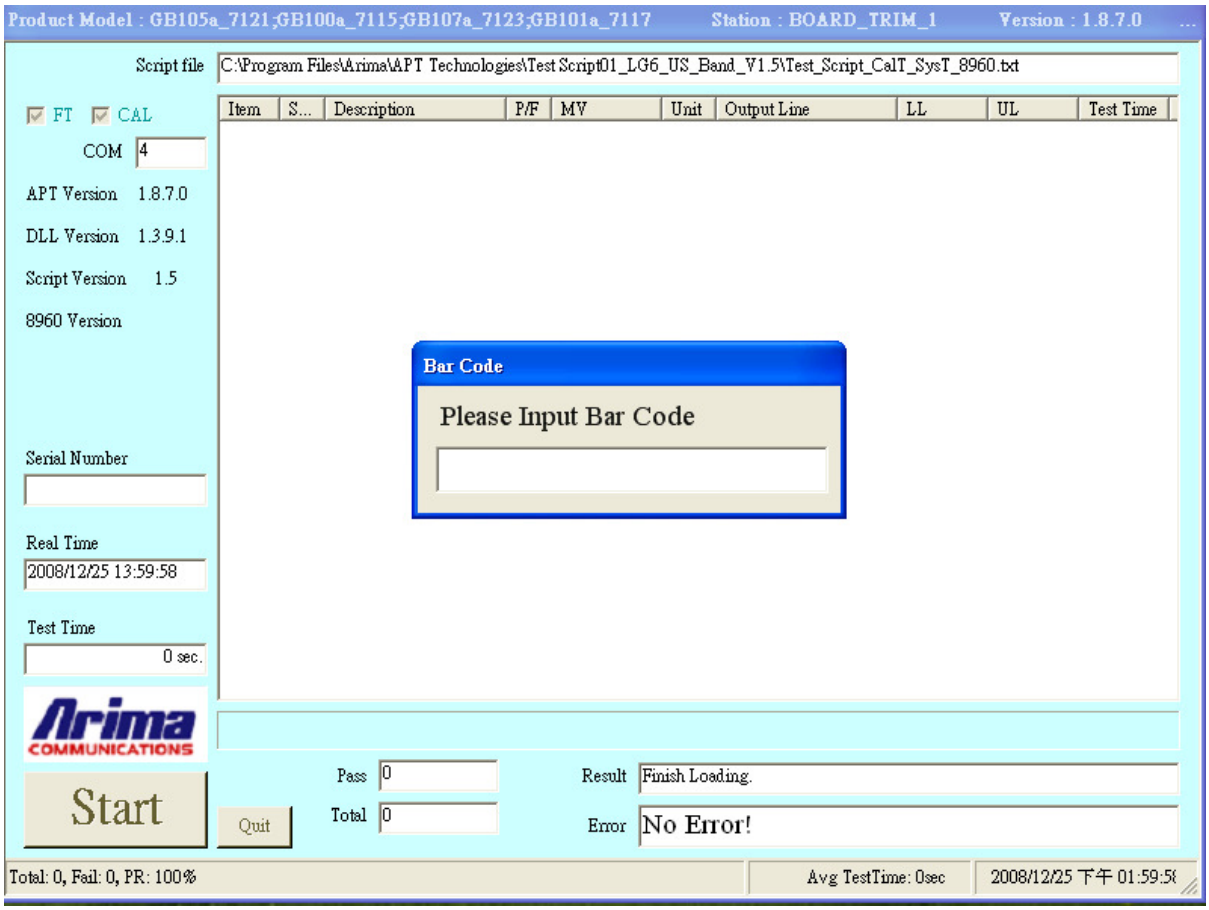

Fig.12 Input Bar Code window

While testing

Will accord with and test the test item by item of the script while testing, every test result will show on List.

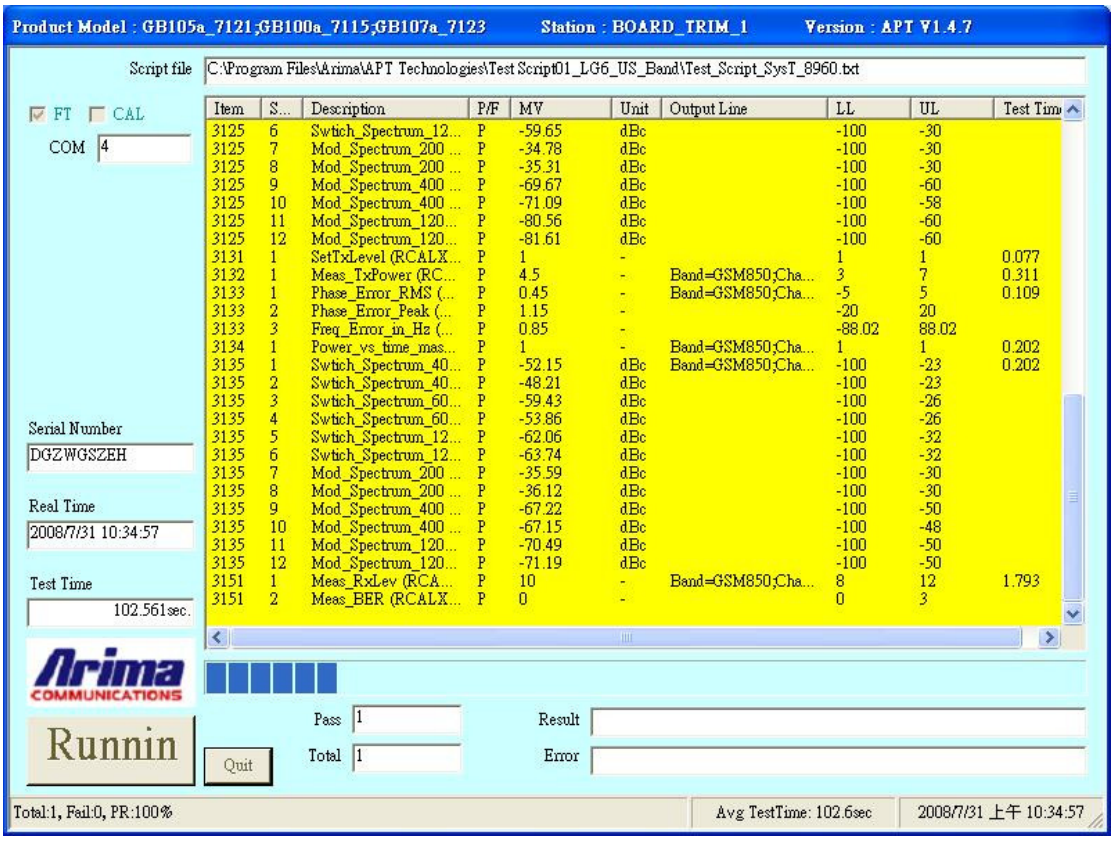

Fig.13 Sketch map while testing

1. Item: Mainly test the procedure serial number.
2. Sub: Test the procedure serial number less importantly.
3. Description: It is tested that the procedure proves.
4. P/F: P means test succeeds, F means test failure.
5. MV: Number value received in test.
6. Unit: Unit.
7. Output Line: Word bunch got in test.
8. LL: The lower limits.
9. UL: The upper limits.
10. Test Time: This tests the execution time of procedure.

Test fails

If there is fail, the picture will show red, and will show the result in Result, if there is Error Message will show on Error. Window with Bar Code input will jump out for continue test the next mobile.

If input QUIT it can close the input Bar Code window, and can make, fix or change and test the script.

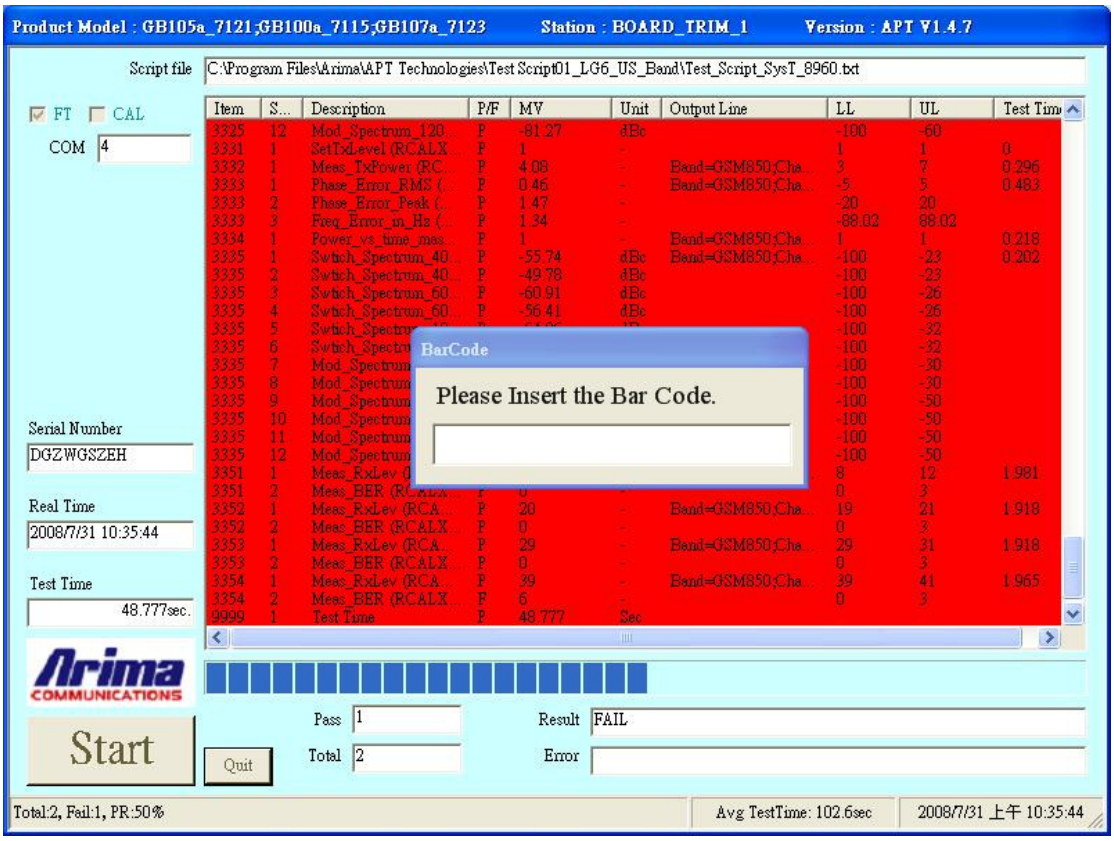

Fig.14 Sketch map that test fails

Test succeeds

Test Pass will getting green, and jump out the input Bar Code window for next test.

If input QUIT it can close the input Bar Code window, and can make, fix or change and test the script.

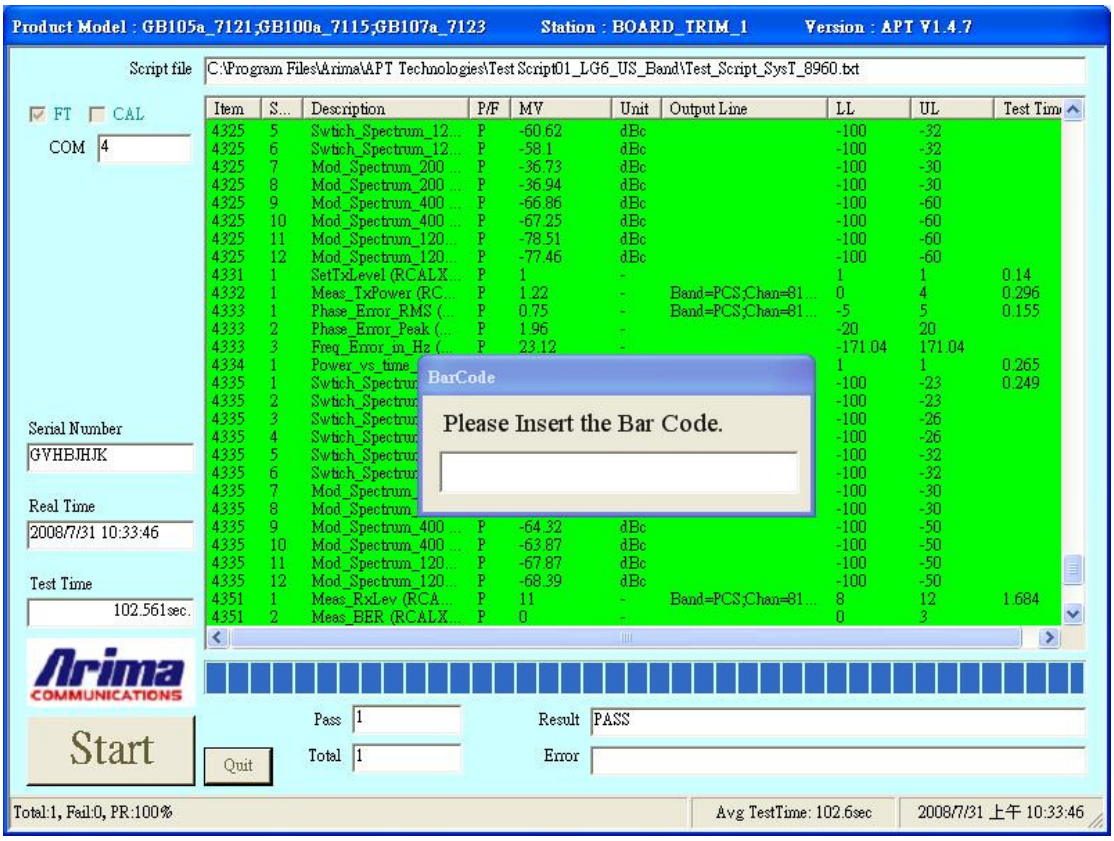

Fig.15 Test succeeds in finishing the sketch map

11.2.4 Set up

Double click the Arima icon will show set up window.

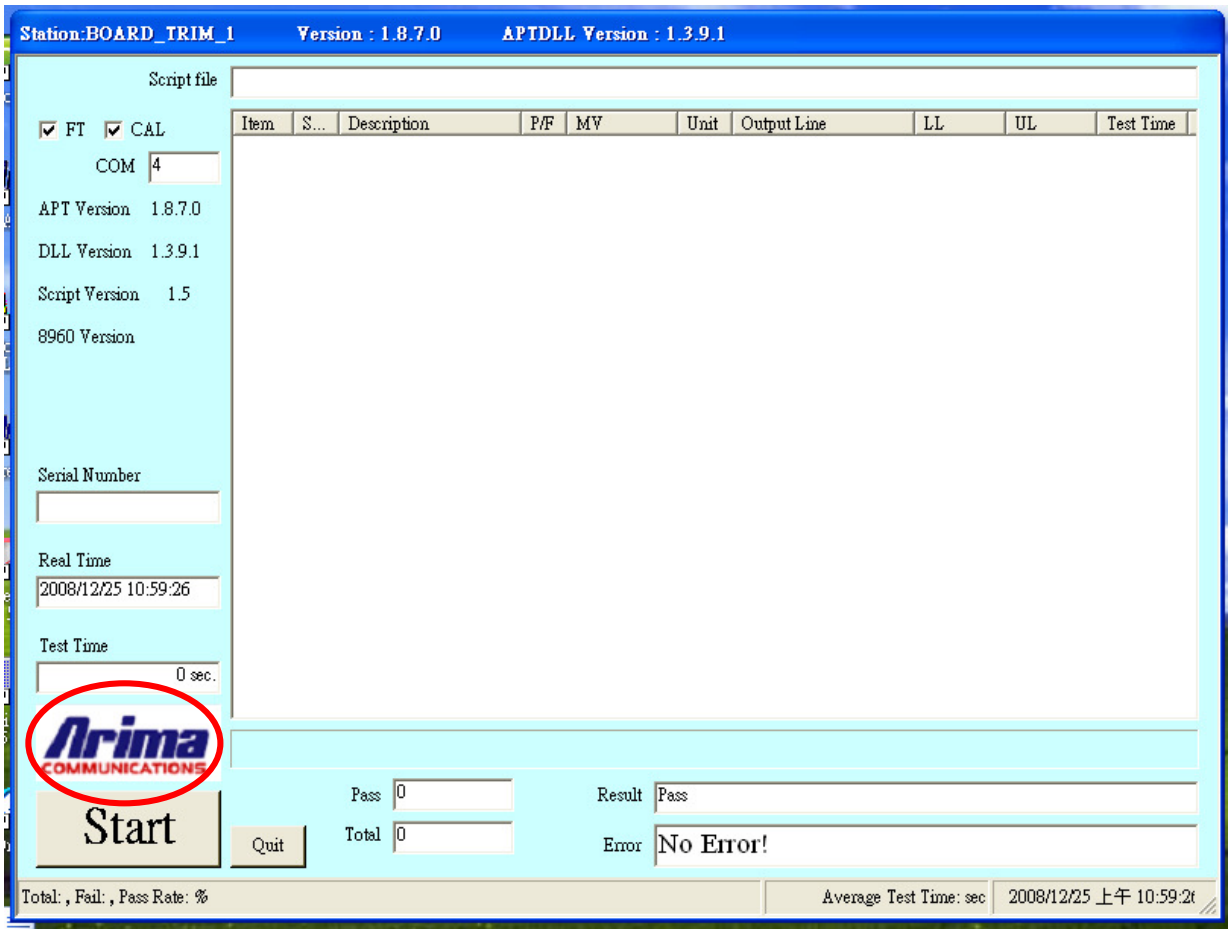

Fig.16 Double click“ARIMA” icon window

The window for setting up Equipment_config.txt file. The item shows as follows.

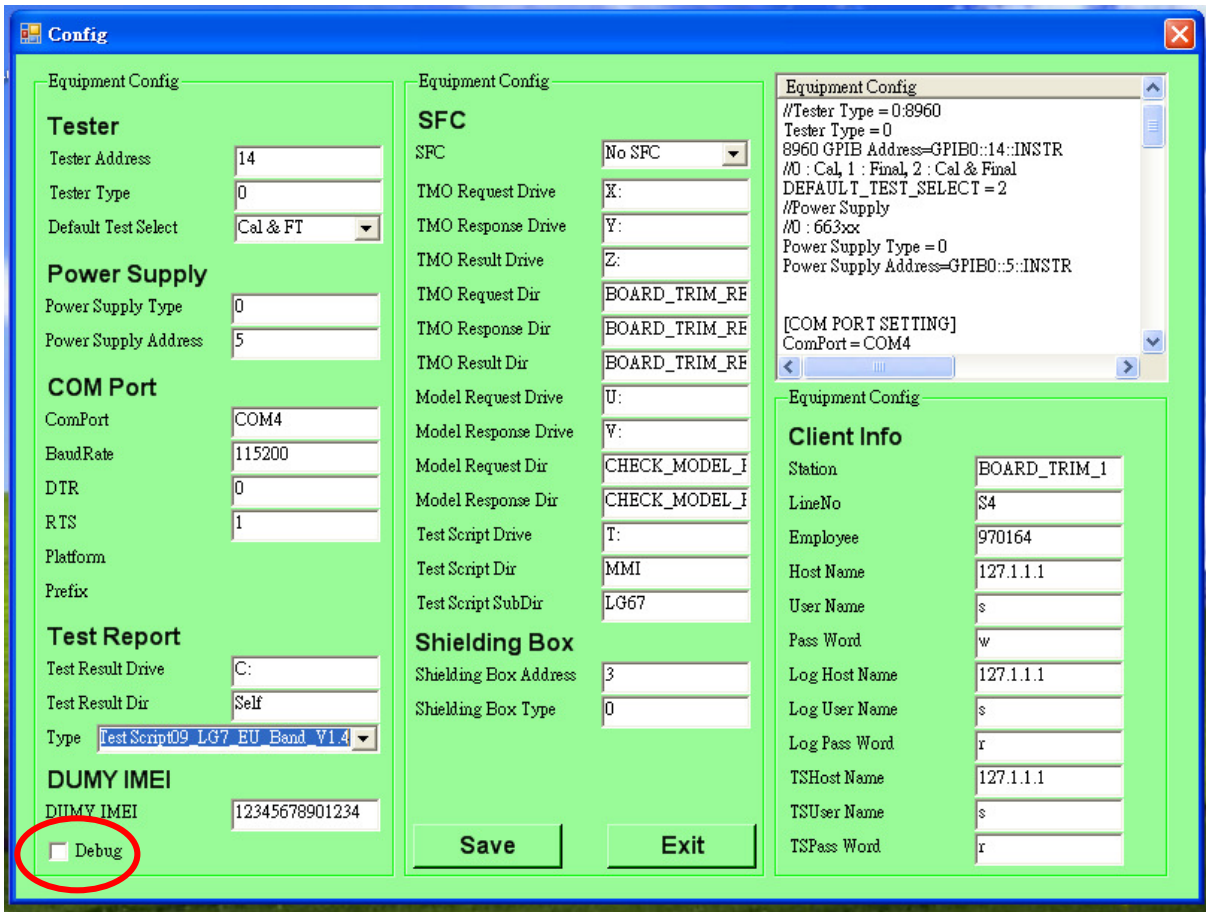

Fig.17 The window for setting up

1.*Tester*

Test Address: Wireless Communication test set GPIB address.

Tester Type: Type of the comprehensive tester. (0: 8960,1: CMU200.)

Default Test Select: Choose default test item.

2.*Power Supply*

Power Supply Type: Type of power supply. (0: 663xx.)

Power Supply Address: Power supply GPIB address.

3.*COM Port*

Com Port: The communication port with mobile phone.

Baud Rate: Baud Rate with the mobile phone communication. (115200)

DTR: DTR with the mobile phone communication. (0)

RST: RST with the mobile phone communication. (1)

Platform: ulc2 or ulc2+. (xmm1020)

Prefix: Mobile phone Config. File does not include the other name of edition. (xmm1020)

4.*Test Report*

Test Result Drive: Set up disk drive names that result file.

Test Result Dir: Set up the materials of the disk drive of the network to insert the name.

If set up and does not use the disk drive of the network for Self.

Type: Choose to carry out the type to test script at present.

5.*DUMY IMEI (No Function)*

DUMY IMEI: Establishment should store the number of IMEI Label.

6.*Debug*

If selected it will continuous the test however test item is fail.

After set up and finish the above six item, push "save" button, will appear a window, click yes to store and initialize. Click Exit to close config setting window.

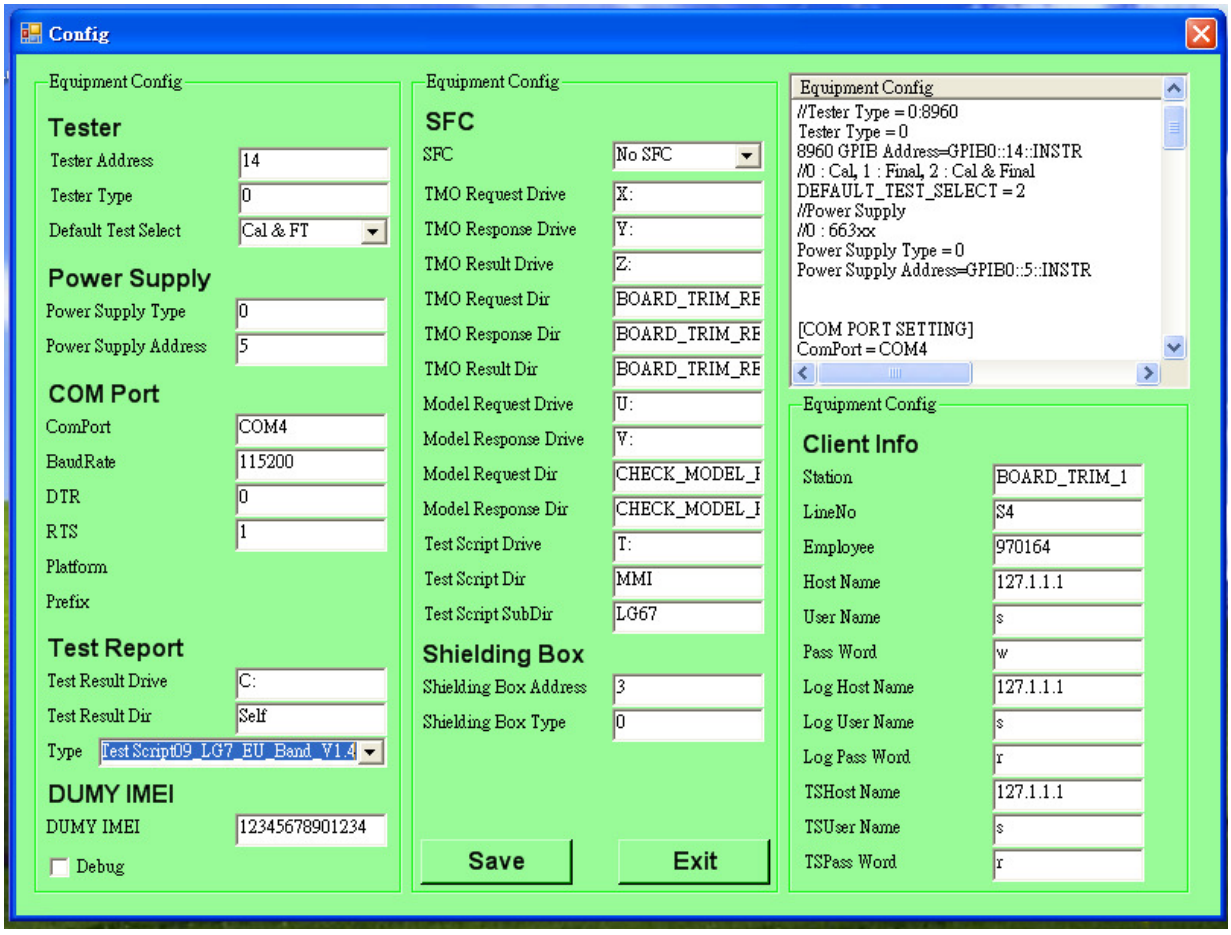

Fig.18 Store and revise the window

11.2.5 Auto Cable Loss Compensation (ACL)

ACL another procedure, install, can by the way installation together, and establishment that use file corresponding to APT, this procedure must correct with Golden, the procedure will calculate Loss that should be mended and write into Cable automatically For APT procedure to use in Loss.txt file. The picture is as follows after opening.

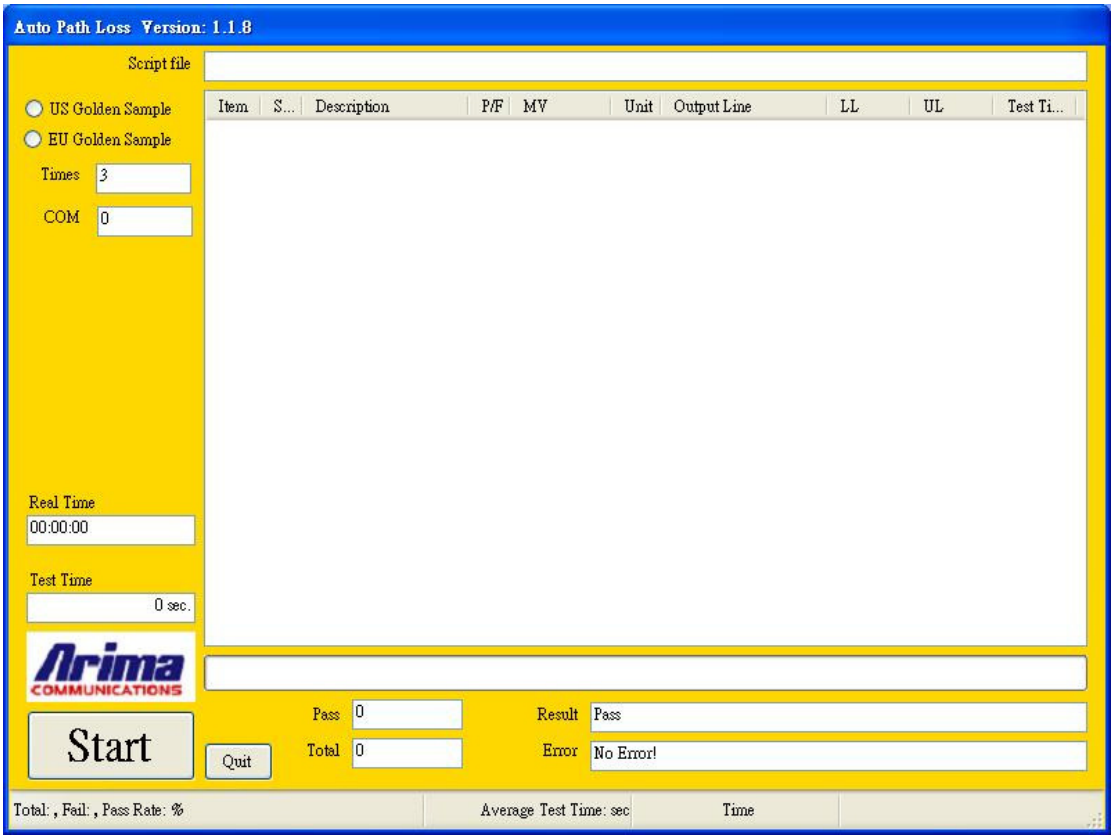

Fig.19 Auto Cable Loss Compensation

This procedure and APT are very much the same, more different place among them, must choose the type of Golden first on the left, and input and test the number of times (Times) the most largely, The procedure will judge automatically if each loss value is less than 0.1 to finish automatically, if exceed testing the figure does not have all loss value to less than 0.1 meetings Fail the most largely.

Succeed Pass can write new Cable Loss value into Cable_Loss.txt file.

12. Stand alone test

12.1 Test program setting

12.1.1 Set COM port

12.1.2 Check PC Baud rate (115200)

12.1.3 Confirm EEPROM &Delta file prefix name

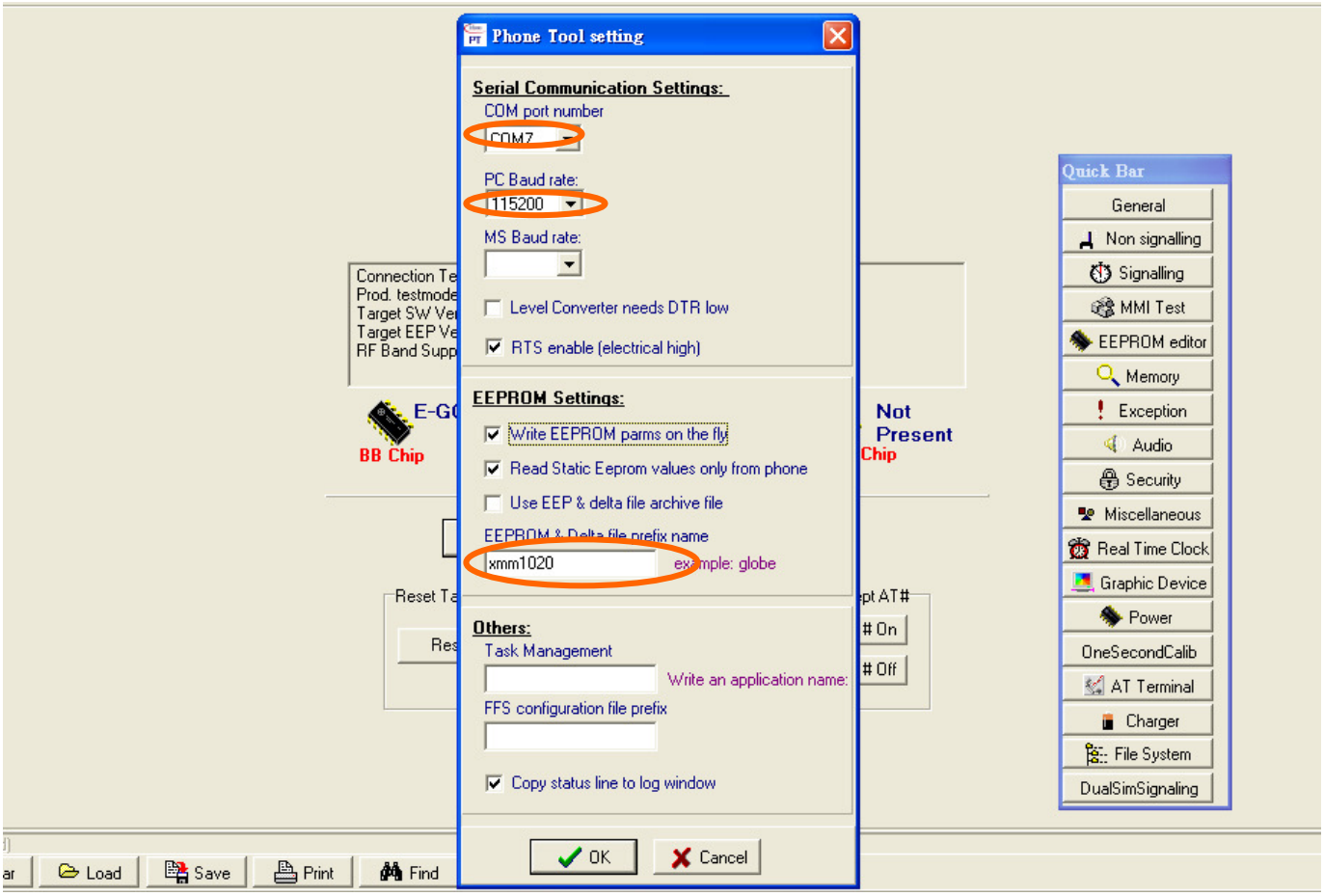

12.1.4 Press power on key, then click “V24AT#ON” and then “ Update Info” for communicating Phone and Test Program

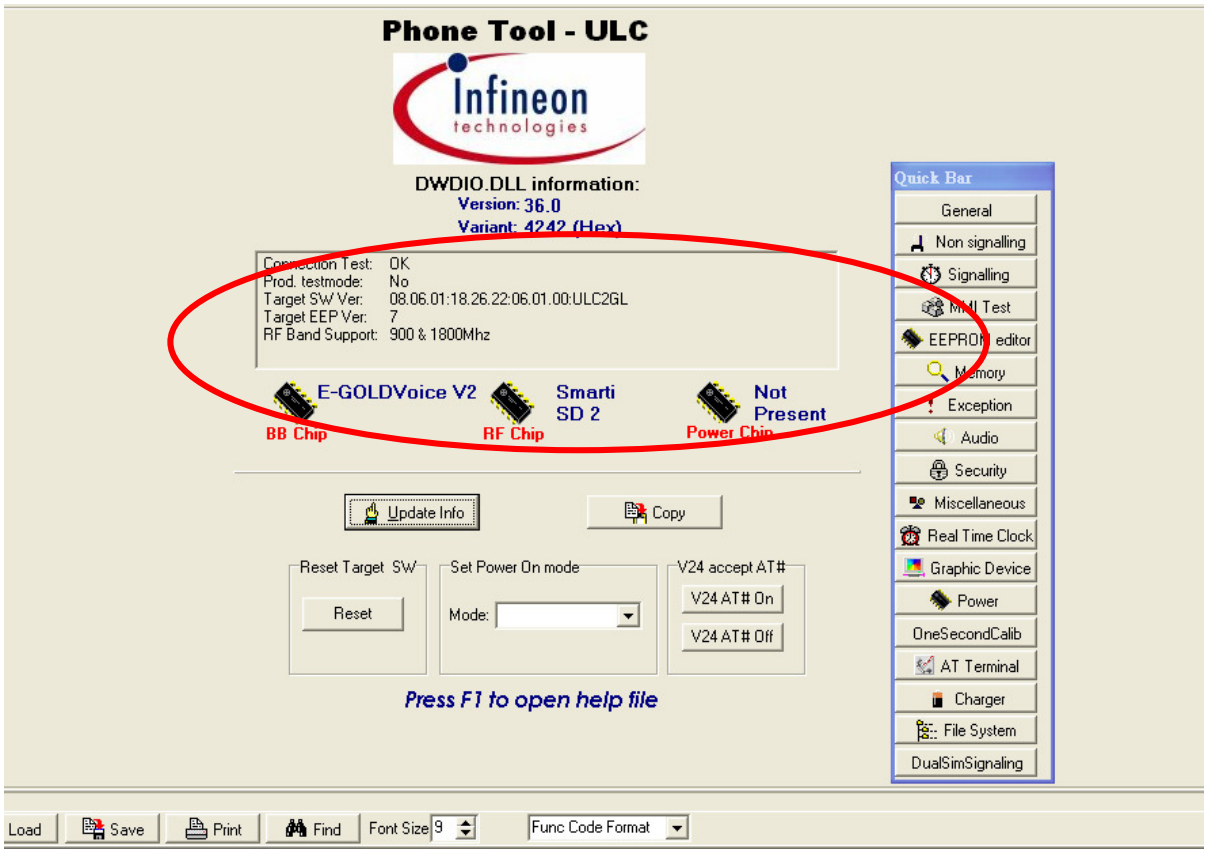

12.1.5 For the purpose of the Stand alone Test ,Change the phone to” ptest mode” and then click the “ Reset” bar

12.1.6 Select “Non signaling” in the Quick Bar menu. Then Stand alone Test set up finished.

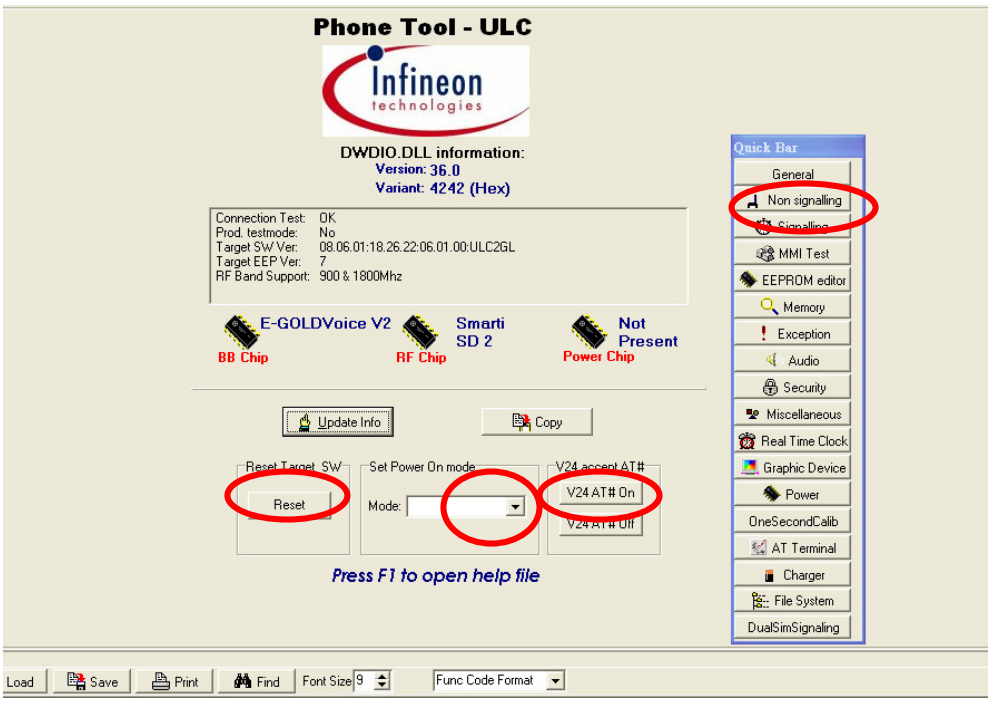

12.2 TX Test

12.2.1 Click “Non signaling mode” bar and then confirm “OK” test in the command line.

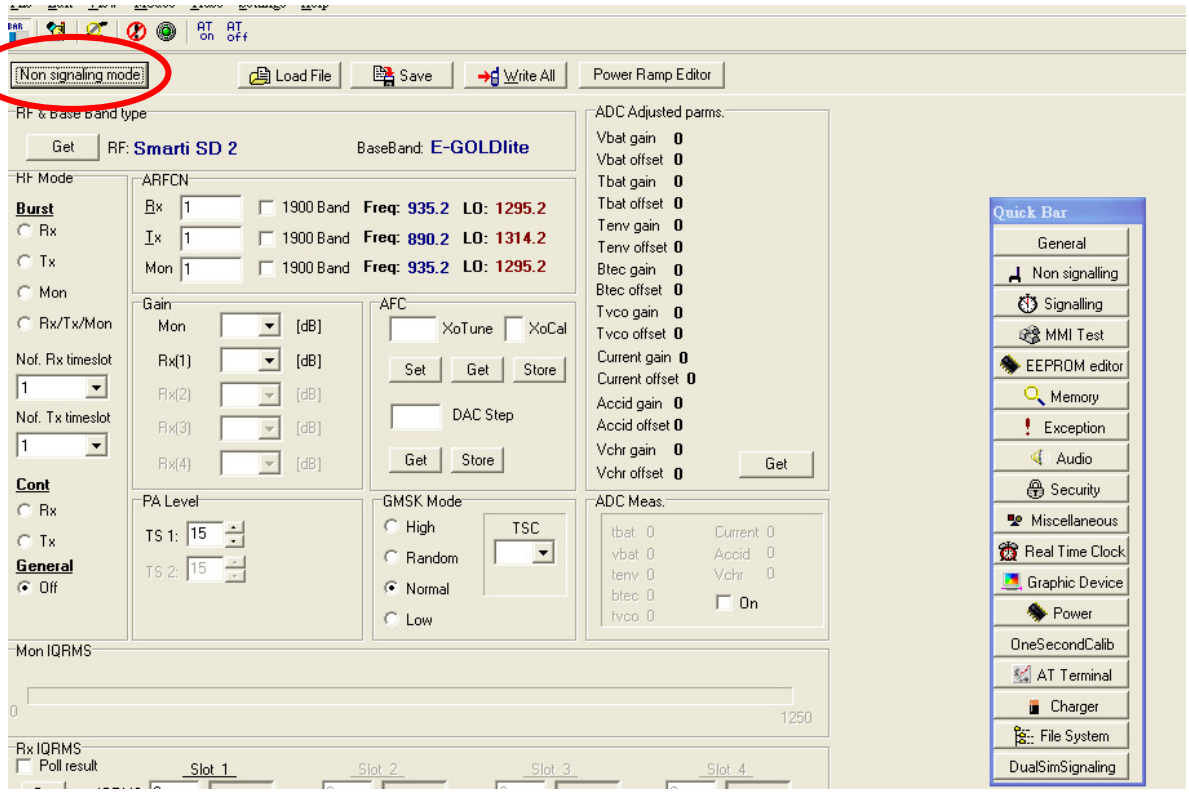

12.2.2 Put the number of TX channel in the ARFCN.

12.2.3 Select “TX” in the RF mode menu and “PCL” in PA level menu .

12.2.4 Finally, Click “Write All” bar and try the efficiency test of phone.

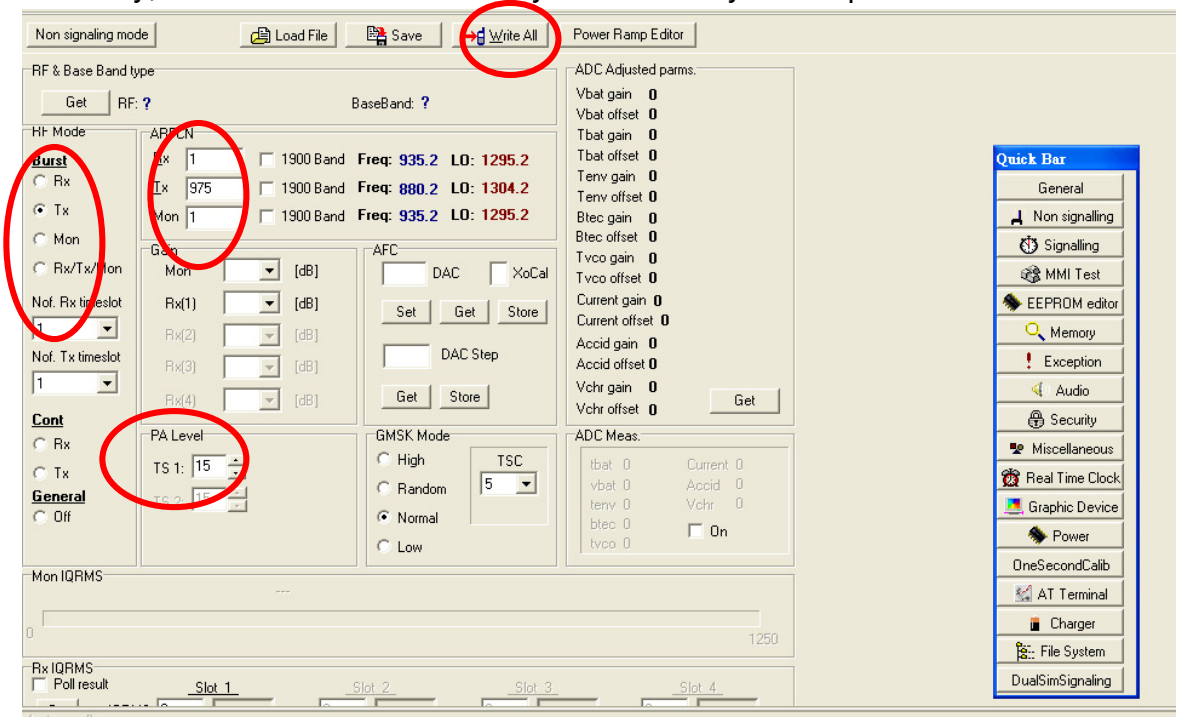

12.3 RX Test

12.3.1 Put the number of RX channel in the ARFCN.

12.2.2 Select “RX” in the RF mode menu.

12.2.3 Finally, Click “Write All” bar and try the efficiency test of phone.

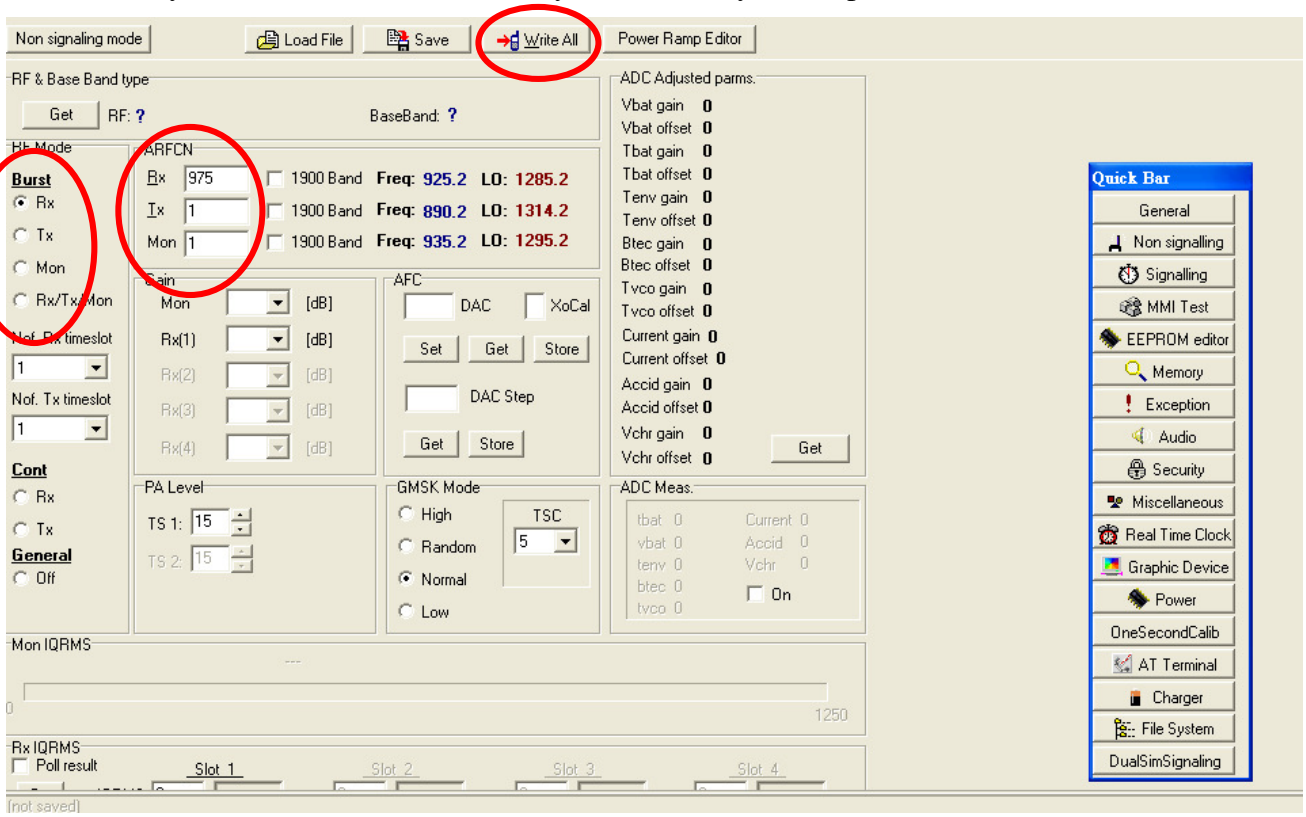

13. EXPLODED VIEW&REPLACEMENT PART LIST

13.1 EXPLODED VIEW

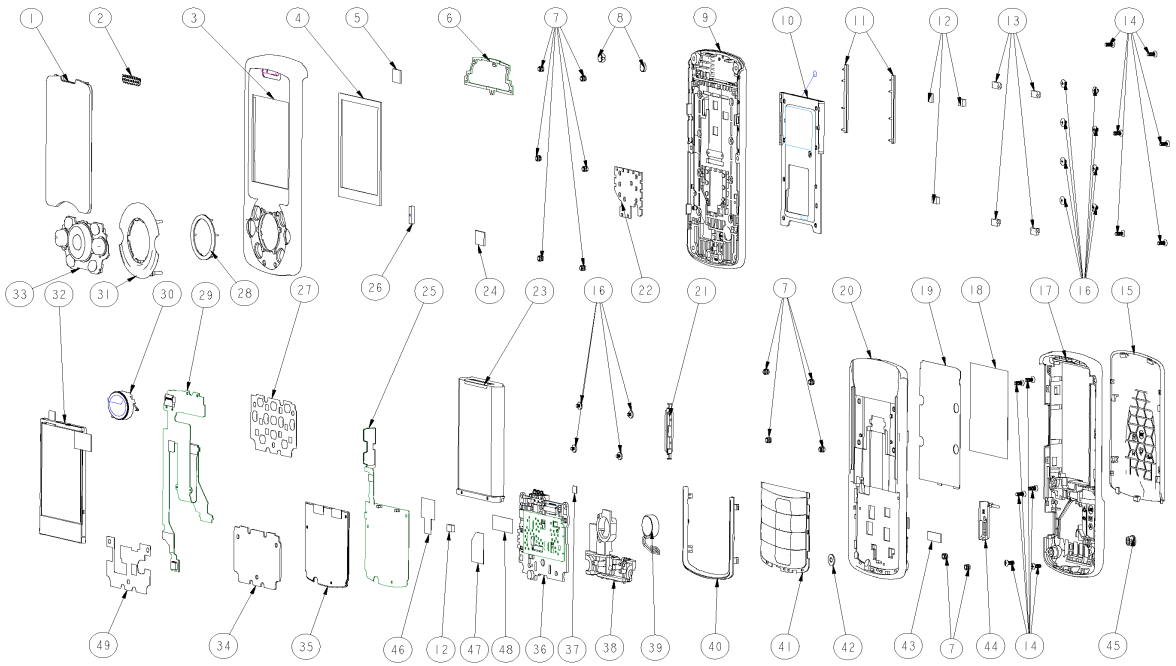

NO.	ITEM	Q'ty	Arima-Part NO.	LGE-Part NO.
33	Top Key Assy	1	404-71330-0003	MBJG0004201
32	LCM	1	327-0000-00076	SVLM0035801
31	Upkey Function	1	401-71330-0001	MCJW0026201
30	2 in 1 Speaker	1	313-0000-00125	MDAH0026701
29	Hinge fpc Assy	1	321-M000-00069	SACY0097801
28	Sub Deco	1	401-71330-0001	MCJW0026201
27	Topkey Metaldome	1	415-71330-0006	ADCA0101901
26	Magnet	1	405-71330-0001	MCJV0019701
25	Main Keypad Fpc	1	321-M000-00068	SACY0097802
24	Up Pcb Conn. Sponge	1	405-71330-0002	ABGG0011501
23	Battery	1	313-0000-00105	SBPL0088801
22	Lcm Metal	1	405-71330-0001	MCJV0019701
21	Sidekey	1	404-71330-0001	MBJL0096001
20	Inner Cover Keypad	1	405-71330-0002	ABGG0011501
19	Hinge FPC Mylar	1	415-71330-0007	MTAJ0023101
18	Label	1	--	--
17	Rear Cabinet	1	402-71330-0001	MCJN0106701
16	Screw(M1.4*1.2)	12	409-00000-0083	GMZZ0029101
15	Battery Cover	1	405-71330-0003	MCJA0094401
14	Screw(M1.6*3.0)	12	409-00000-0082	GMZZ0029001
13	Stop Block	4	415-71330-0008	MGAD0198701
12	FPC Conductive Sponge	4	415-71330-0001	MPBF0046801
11	Up Trail	2	405-71330-0001	MCJV0019701
10	Hinge Assy	1	411-00000-0008	ARDY0002516
9	Inner Cover Display	1	405-71330-0001	MCJV0019701
8	Screw Cap	2	405-71330-0005	MCCH0153001
7	Insert Nut	12	--	--
6	Speaker Sponge	1	405-71330-0001	MCJV0019701
5	Lcm Connector Sponge	1	401-71330-0001	MCJW0026201
4	Lcm Sponge	1	401-71330-0001	MCJW0026201
3	Front Cabinet	1	401-71330-0001	MCJW0026201
2	Speaker PC Mesh	1	401-71330-0001	MCJW0026201
1	Main Lens(Orange logo)	1	403-71330-0002	MWAC0123001

49	Up pcb Adhesive	1	415-71330-0002	MTAJ0023401
48	Hinge Fpc Conn. Capton	1	415-71330-0011	MTAJ0022801
47	Copper Foil	1	415-71330-0014	
46	Hinge Fpc Conductive Fabric	1	415-71330-0012	MGAD0198201
45	RF Cap	1	405-71330-0004	MCCF0064701
44	IO Cover	1	402-71330-0001	MCJN0106701
43	Hinge Fpc Connector Sponge	1	405-71330-0002	ABGG0011501
42	Mic Sponge	1	405-71330-0002	ABGG0011501
41	Main Keypad	1	404-71330-0002	MKAG0017401
40	Main key Deco. Trail	1	415-71330-0005	MBJG0053201
39	Vibrator	1	320-0000-00048	SJMY0009701
38	Antenna	1	330-0000-00127	SNGF0049501
37	Water Proof Label	1	478-221100-003	MLAZ0052001
36	Main Pcb Assy	1	8-01-7133N0-01	SAFF0251101
35	Light Guide	1	415-71330-0004	ADCA0101701
34	Up Pcb Assy	1	8-05-7133N0-01	SAEE0035001

THESE DRAWINGS AND SPECIFICATIONS ARE THE PROPERTY OF ARIMA COMMUNICATION CORP. AND SHALL NOT BE REPRODUCED OR USED AS THE BASIS FOR THE MANUFACTURE OR DEVICES WITHOUT PERMISSION.

DIMENSIONAL TOLERANCES±	M1	M2	S1	S2	P1	P2	C
0~6	0.05	0.10	0.15	0.20	0.05	0.10	0.5
6~30	0.10	0.20	0.15	0.25	0.10	0.15	1.0
30~80	0.15	0.25	0.20	0.30	0.20	0.40	2.0
80~180	0.15	0.30	0.25	0.45	0.40	0.80	3.0
180~315	0.20	0.50	0.40	0.60	0.60	1.20	3.0
315~800	0.30	0.80	0.70	1.10	0.80	1.50	4.0

SCALE 0.500	UNITS	MM	USED ON	Material:	THIRD ANGLE PROJECTION
DWING NAME	CLOSE_STATE_ASSY	DWG NO.		Treatment:	A3 SIZE

Drawn:	Grace Zheng
Designed:	David/Fei Meng
Checked:	Fu Xiang
Approved:	
DESCRIPTION:	7133 Slide Phone
PART NO.:	REV. 002
SHEET 1 OF 1	DATE

Ass'y exploded view

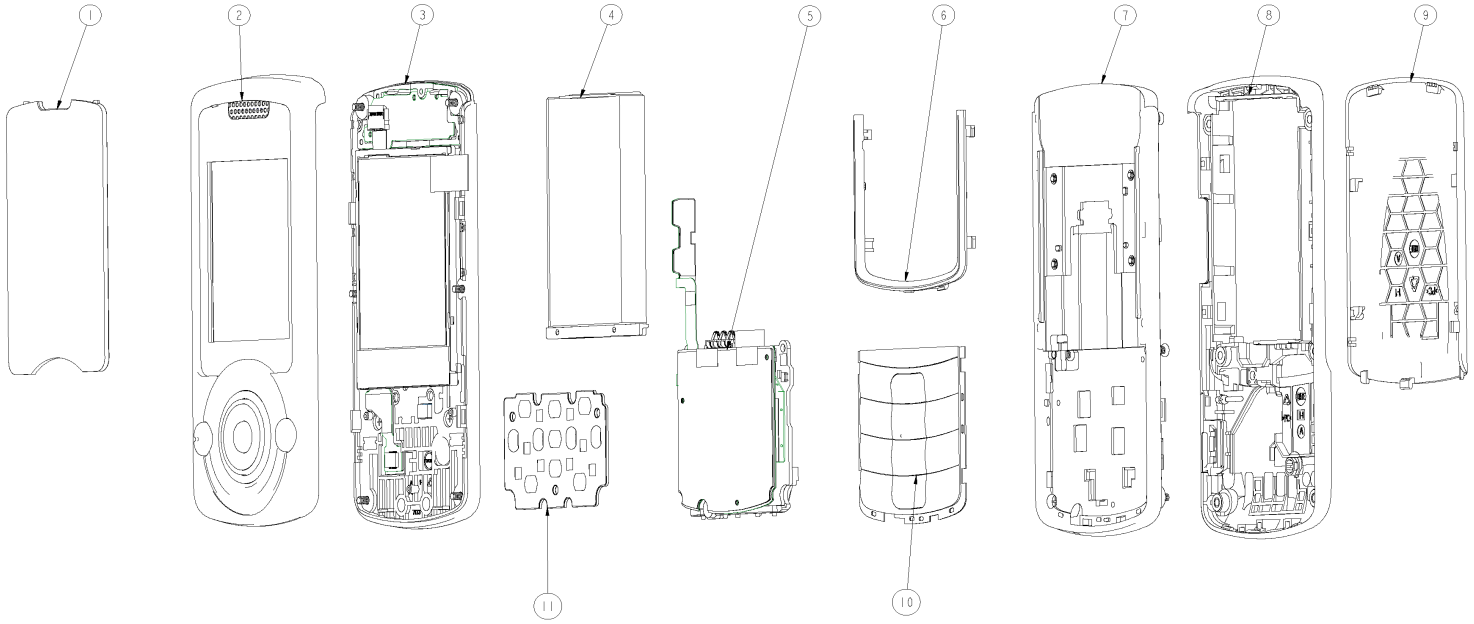

SCALE 1.000

NO.	ITEM	Q'ty	Arima-Part NO.	LGE-Part NO.
11	Up pcb Assy	1	8M08-7133-N001	SAEY0068501
10	Main Key	1	404-71330-0002	MKAG0017401
9	Battery Cover	1	405-71330-0003	MCJA0094401
8	Rear Cabinet Assy	1	8M02-7133-B001	MCJN0106701
7	Inner Cover Keypad Assy	1	8M09-7133-S001	ABGG0011501
6	Main key Deco. Trail	1	415-71330-0005	MBJG0053201
5	Main Pcb Assy	1	8M08-7133-N002	
4	Battery	1	313-0000-00105	SBPL0088801
3	Inner Cover Display Assy	1	8M09-7133-S002	ACGR0020001
2	Front Cabinet Assy	1	8M01-7133-B001	ACGS0029701
1	Main Lens	1	403-71330-0002	MWAC0123001

THESE DRAWINGS AND SPECIFICATIONS ARE THE PROPERTY OF ARIMA COMMUNICATION CORP. AND SHALL NOT BE REPRODUCED OR USED AS THE BASIS FOR THE MANUFACTURE OR DEVICES WITHOUT PERMISSION.

DIMENSIONAL TOLERANCES±	M1	M2	S1	S2	P1	P2	C
0~6	0.05	0.10	0.15	0.20	0.05	0.10	0.5
6~30	0.10	0.20	0.15	0.25	0.10	0.15	1.0
30~80	0.15	0.25	0.20	0.30	0.20	0.40	2.0
80~180	0.15	0.30	0.25	0.45	0.40	0.80	3.0
180~315	0.20	0.50	0.40	0.60	0.60	1.20	3.0
315~800	0.30	0.80	0.70	1.10	0.80	1.50	4.0

SCALE 1.000 | UNITS MM | USED ON

DWING NAME CLOSE_STATE_ASSY | DWG NO. | DATE

Material: | Treatment: | THIRD ANGLE PROJECTION | A3 SIZE

Drawn: Grace Zheng
Designed: Fei Meng & David Da
Checked: Fu Xiang
Approved:
DESCRIPTION: 7133 Slide Phone
PART NO.: | REV. 002
SHEET | OF

13.2 Replacement Parts List

Level	Ref Des	*Number	Description	LG Part Number	Qty
. 1	Battery	306-0000-00060	Li-ion Battery Cell Packing_3.7V_950mAh_BLACK_LGIP-531A-7115_BYD_Cell LP053450ARU2	SBPL0088801	1
. 1	Headset	333-0000-00058	Headset Stereo Channel Type_HC-MYD-LG056_16 Ohm_Mic.S/N' 58 'dB_- 42 'dB_I-SOUND_Mic.±3dB,18 pin I/O Plug	SGEY0003213	1
. 1	Adapter	331-0000-00102	Travel Charger_100~240V_4.80V_400mA_UL_STA-P53ES_EN50075_HAN SHIN_SALCOMP_18 PIN I/O PLUG	SSAD0028203	1
.. 2	Main Lens	403-71330-0002	Lens_7133_BLACK_PMMA+PC_N/A_Main Lens_OPTEC_N/A	MWAC0123001	1
... 3	Top Key Metal Dome	415-71330-0006	DOME_7133_WHITE_STAINLESS STEEL_N/A_Top Key Metal Dome_PRINTEC_N/A	ADCA0101901	1
.. 2	Front Cover Sub-Ass'y	8M01-7133-B001	Front Cover Sub-Ass'y_7133_BLACK_Front cabinet	ACGS0029701	1
... 3	Front Cabinet	401-71330-0001	Front Cabinet_7133_BLACK_PC_Painting_Front cabinet Ass'y_GABEUL_N/A	MCJW0026201	1
... 3	TOP Key	404-71330-0003	Key_7133_BLACK_PC+Rubber_Painting_N/A_Top Key_GOOD ELECTRICITY_N/A	MBJG0004201	1
... 3	RECEIVER+SPEAKER	313-0000-00125	RECEIVER+SPEAKER_YD-1813TS_13 * 18 mm_8 Ohm_89.0/122.0dB_CHANG ZHOU YU CHENG_± 3dB, H=3.9mm,Spring contact	SURY0014801	1
... 3	SHEET	415-71330-0011	SHEET_7133_N/A_KAPTON_N/A_Hinge FPC Connector Kapton_GUAN YI(WUJIANG)_N/A	MTAJ0022801	1
... 3	Metal Dome+LGF	415-71330-0004	DOME_7133_WHITE_PLASTIC+METAL_N/A_Metal Dome+LGF_PRINTEC_N/A	ADCA0101701	1
... 3	GASKET	415-71330-0012	GASKET_7133_N/A_CONDUCTIVE GASKET_N/A_Hinge FPC Conductive Fabric_GUAN YI(WUJIANG)_N/A	MGAD0198201	1
... 3	MODULE (key board)	321-M000-00068	MODULE_7133_PI-RoHS_36.81*49.81mm_0.150 mm_2 Layer_Immersion Gold_N/A_7133KB-003	SACY0097802	1
... 3	Water proof label	478-221100-003	Water proof label_Mech. Label_7133_Global_WATER PROOF LABEL_N/A_E-LIN(KUNSHAN)	MLAB0005901	1
.. 2	Screw	409-00000-0083	Machine Screw_Flat_Cross(JCIS)_1.4mm_1.2mm_SILVER_Steel_Plating Zinc_KUAOLENG(SHANGHAI)_Nylok	GMZZ0029101	4
.. 2	Screw	409-00000-0082	Machine Screw_Flat_Cross(JCIS)_1.6mm_3mm_BLACK_Steel_Plating Zinc_KUAOLENG(SHANGHAI)_Nylok	GMZZ0029001	6
.. 2	Screw cap	405-71330-0005	Cover_7133_SILVER_RUBBER、SILICON RUBBER_Painting_Screw cap_YIDA(KUNSHAN)_N/A	MCCH0153001	2
.. 2	Key	404-71330-0002	Key_7133_SILVER_PC+TPU_Painting_ENGLISH_Main key_GOOD ELECTRICITY_N/A	MKAG0017401	1
.. 2	DECORATION	415-71330-0005	DECORATION_7133_SILVER_POM_N/A_Main key deco. trail_GABEUL_N/A	MCCH0053101	1
.. 2	Inner Cover Sub-Ass'y	8M09-7133-S002	Inner Cover Sub-Ass'y_7133_SILVER_Inner cover display	ACGR0020001	1
... 3	Inner cover	405-71330-0001	Cover_7133_SILVER_PC_Painting_Inner cover display_GABEUL_N/A	MCJV0019701	1
... 3	LCD	327-0000-00076	LCD TFT_Transmissive_128x160 Pixels_2.00 inch_IM200BBN2A_LG INNOTEK_262K Color, FPC + connector	SVLM0035801	1
... 3	Slide Hinge	411-00000-0008	Slide Hinge_0.2kgf_Painting_DIABELL_KDSH-SS-37-715_N/A	ARDY0002516	1
... 3	GASKET	415-71330-0008	GASKET_7133_SILVER_TPU_N/A_Hinge stop block_YIDA(KUNSHAN)_N/A	MGAD0198701	4
... 3	FPC Conductive Sponge	415-71330-0001	GASKET_7133_GRAY_CONDUCTIVE GASKET_N/A_FPC Conductive Sponge_GUAN YI(WUJIANG)_N/A	MTAJ0022901	5
... 3	MODULE	321-M000-00069	MODULE_7133_PI-RoHS_114.94*34.15mm_0.200 mm_2 Layer_Immersion Gold_N/A_7133HB-003	SACY0097801	1
.. 2	Inner Cover Sub-Ass'y	8M09-7133-S001	Inner Cover Sub-Ass'y_7133_SILVER_Inner cover keypad	ABGG0011501	1
... 3	Inner cover key pad	405-71330-0002	Cover_7133_SILVER_PC_Painting_Inner cover keypad_GABEUL_N/A	ABGG0011501	1
.. 2	Key	404-71330-0002	Key_7133_SILVER_PC+TPU_Painting_ENGLISH_Main key_GOOD ELECTRICITY_N/A	MKAG0017401	1
... 3	FPC Mylar	415-71330-0007	SHEET_7133_BLACK_PET_N/A_Hinge FPC Mylar_GUAN YI(WUJIANG)_N/A	MTAJ0023101	1
... 3	FPC Conductive Sponge	415-71330-0001	GASKET_7133_GRAY_CONDUCTIVE GASKET_N/A_FPC Conductive Sponge_GUAN YI(WUJIANG)_N/A	MPBF0046801	1

.. 2	Rear Cover Sub-Ass'y	8M02-7133-B001	Rear Cover Sub- Ass'y_7133_BLACK_Rear cabinet	MCJN0106701	1
... 3	Rear Cabinet	402-71330-0001	Rear Cabinet_7133_BLACK_PC_Painting_Rear Cabinet Ass'y_GABEUL_N/A	MCJN0106701	1
.. 2	RF Cap	405-71330-0004	Cover_7133_BLACK_PC+TPU_Painting_RF Cap_A-TEK PRECISION(SUZHOU)_N/A	MCCF0064701	1
.. 2	Screw	409-00000-0082	Machine Screw_Flat_Cross(JCIS)_1.6mm_3mm_BLACK_Steel_Plating Zinc_KUAOLENG(SHANGHAI)_Nylok	GMZZ0029001	6
... 3	Side Key	404-71330-0001	Key_7133_BLACK_PC+TPU_Painting_N/A_Side Key_A-TEK PRECISION(SUZHOU)_N/A	MBJL0096001	1
. 1	Battery cover	405-71330-0003	Cover_7133_N/A_PC_Painting_Battery cover_GABEUL_N/A	MCJA0094401	1
... 3	ADHESIVE	415-71330-0002	ADHESIVE_7133_TRANSPARENT_ADHESIVE_N/A_Up PCB Adhesive_GUAN YI(WUJIANG)_N/A	MTAJ0023401	1
... 3	Main Board Ass'y	8-01-7133N0-01	Main Board Ass'y_7133_NATURAL_7133MB	SAFF0251101	
..... 5	X301	305-0000-00069	Crystal Oscillator_EXS00A-CS00030_26.0 MHZ_±8.0ppm_SMD-3.2*2.5mm-4Pin_NDK_NX3225SA	EXSY0023701	1
..... 5	X302	305-0000-00026	Crystal Oscillator_Q13MC1461000200_32.768KHZ_±20ppm_SMD-7*1.5mm-4Pin_EPSON TOYOCOM_MC-146 type	EXSY0024801	1
..... 5	D801	309-0000-00029	Diode Schottky_RB520S30T1G_N/A_2pin_SOD-523_200mA/0.6V_ON SEMI_N/A	EDSY0018201	1
..... 5	U101	311-0000-00028	I.C POWER AMP MODULE(RF)_SKY77518-11_MCM_20 PINS_NoMemory_SKYWORKS_6*8*1.2mm	EUSY0377501	1
..... 5	U102	326-0000-00117	Filter SAW_B39182B9308G110_942.5MHz/1842.5MHz_EPCOS_FOR GSM RX,50/150 OHM-SMD10PIN	SFSY0038501	1
..... 5	U301	311-0000-00646	I.C BASEBAND PROCESSOR_PMB7890_BGA_189 BALLS_NoMemory_INFINEON_N/A	EUSY0384001	1
..... 5	U401	311-0000-00639	I.C STACKED MEMORY_S71GL064NA0BFW0Z0_FPBGA_56 BALLS_64M+16M_SPANSION_FLASH + PSRAM	EUSY0384101	1
..... 5	U403	311-0000-00675	I.C STANDARD LOGIC_NC7SZ08P5X_SC70_5 PINS_NoMemory_FAIRCHILD_2 INPUT AND GATE	EUSY0384401	1
..... 5	U501	311-0000-00689	I.C AUDIO POWER AMPLIFIER_TPA6202A1ZQVR_BGA_8 Balls_NoMemory_TI_Vo=3.6V, 0.63 W, 8 Ohm	EUSY0376801	1
..... 5	U502	311-0000-00676	I.C STEREO AUDIO POWER AMPLIFIER_TS486-IQT_DFN_8 PINS_NoMemory_ST_Po=3.3V,16 Ohm, 42mW	EUSY0377001	1
..... 5	U503	311-0000-00773	I.C ANALOG SWITCH_DG2735DN-T1-E4_UQFN_10 PINS_NoMemory_VISHAY_DUAL SPDT SWITCH	EUSY0394701	1
..... 5	U602	310-0000-00071	NPN Epitaxial Planar Transistor_PDTC143ZE_3pin_SOT-416_PHILIPS_R1=4.7K, R2=47K	EQBP0011201	1
..... 5	FL501	326-0000-00039	Filter Dual Mode_EXC24CP121U_100MHz_PANASONIC_Noise,4pin-0504,120Ohm,I=500mA	SFDY0002401	1
..... 5	U801	310-0000-00037	N Channel-MOSFET_NTA4153NT1G_3pin_SC-75_ON SEMI_20V/915 mA	EQBP0011301	1
..... 5	U802	310-0000-00089	NPN General Purpose Transistor_2PC4617R_3pin_SC-75_PHILIPS_N/A	EUSY0384201	1
..... 5	U803	311-0000-00632	I.C CHARGE_MP26021DQ-LF-Z_QFN_10 PINS_NoMemory_MPS_FOR Li-ion BATTERY,2.8V/1A	EUSY0377301	1
..... 5	U804	311-0000-00759	I.C DC-DC CONVERT_AAT3193IJQ-1-T1_SC70_10PINS_NoMemory_AAT_Charge Pump LED Driver	EUSY0394801	1
..... 5	U901	311-0000-00762	I.C FM MODULE_Si4708-B-GM_QFN_16 PINS_NoMemory_SILICON LABS_N/A	EUSY0394901	1
..... 5	U1001	311-0000-00458	I.C HALL EFFECT SWITCH_EM-1781-T5_SOT23-4_4 pin_NoMemory_ASAHI KASEI_N/A	EUSY0386101	1
..... 5	W101	314-0000-00016	CON. ANTENNA CONNECTOR_C90-101-0004_NA_6 pin_SPEED TECH CORP(BEIJING)_For Antenna Switch	ENWY0006901	1
..... 5	J501	312-0000-00040	Omni-MIC._SOM4013SB-Z422-C3310_58 'dB_- 42dB_± 2.0dB_Φ4.0*1.30mm_NA_SMD Type_GONGDA_N/A	SUMY0012401	1
..... 5	J601	314-0000-00418	CON. FPC CONNECTOR_04 6293 031 001 829+_0.300 mm_31 pin_KYOCERA ELCO_H=0.85mm	ENBY0050501	1

..... 5	J603	314-0000-00393	CON. PCB FEMALE CONNECTOR_24 5805 016 000 829+_0.400 mm_16 pin_KYOCERA ELCO_H=1.0mm	ENBY0050601	1
..... 5	J701	314-0000-00411	CON. I/O FEMALE CONNECTOR_GU042-18P-E1000_0.400 mm_ 18 pin_LS MTRON_H=2.5mm	ENBY0050701	1
..... 5	J702	314-0000-00361	CON. SIM CARD CONNECTOR_SIM-06LR3G_2.540 mm_6 pin_O CTEKCONN_H=2.40mm	ENBY0049701	1
..... 5	J801	314-0000-00412	CON. BATTERY CONNECTOR_BTP-03MJ3B_3.000 mm_3 pin_O CTEKCONN_H=4.43mm	ENBY0050801	1
..... 5	CASE	415-71330-0009	CASE_7133_SILVER_STAINLESS STEEL+COPPER-NICKEL-ZIN C ALLOY_N/A_BB Shielding Case_PLIGHT(JIANGSU)_N/A	MCBA0054701	1
... 3	Vibrator	320-0000-00048	Vibrator Coin Type Without Connector_C1030L-070022302-2408_ Φ10.0*3.00mm_LNLON_Wire type	SJMY0009701	1
... 3	Antenna	330-0000-00127	ANTENNA EMBEDDED_7133_DUAL BAND(GSM/DCS)_SILVER_ NC028IA84_SHANGHAI UNIVERSE_PC Carrier + Metal ANT.	SNGF0049501	1
... 3	Keypad Board	8-05-7133N0-01	Keypad Board Ass'y_7133_NATURAL_7133 KB	SAEE0035001	1
..... 5	BAT101	306-0000-00033	Li. Button Battery Cell-RTC- Reflowable_3.3V_0.015mAh_NoColor _KS414T-E/ER_KITAGAWA_N/A	SBCC0000101	1
..... 5	D101-D108	309-0000-00021	LED Single Color_LTST-C193TBKT-5A_BLUE_2pin_0603_5mA/18 ~28mcd_LITEON_Luminous Bin Code=M1/M2	EDLH0015001	8
..... 5	U101	310-0000-00071	NPN Epitaxial Planar Transistor_PDTC143ZE_3pin_SOT-416_PHIL IPS_R1=4.7K, R2=47K	EQBP0011201	1
..... 5	J102	314-0000-00393	CON. PCB FEMALE CONNECTOR_24 5805 016 000 829+_0.400 mm_16 pin_KYOCERA ELCO_H=1.0mm	ENBY0050601	1